5 Slabs

In-depth study and additions to Stahlbeton II

Learning objectives

Based on this chapter, the students are able to:

- design and assess slabs with orthogonal and skew reinforcement based on elastic and plastic slab theory and thereby
  - elaborate on the applicability, accuracy, and limitations of the used approaches.
  - explain the underlying differences of the methods, especially with respect to the treatment of twisting moments.
- illustrate in terms of Mohr's circles the superposition of the bending resistance of two layers of orthogonal or skew reinforcement and explain how it results in the bending moment yield conditions.
- identify the necessity and how to design edge reinforcement in slab corners and edges.

Slabs - Basics

Structural analysis / Calculation methods - Overview

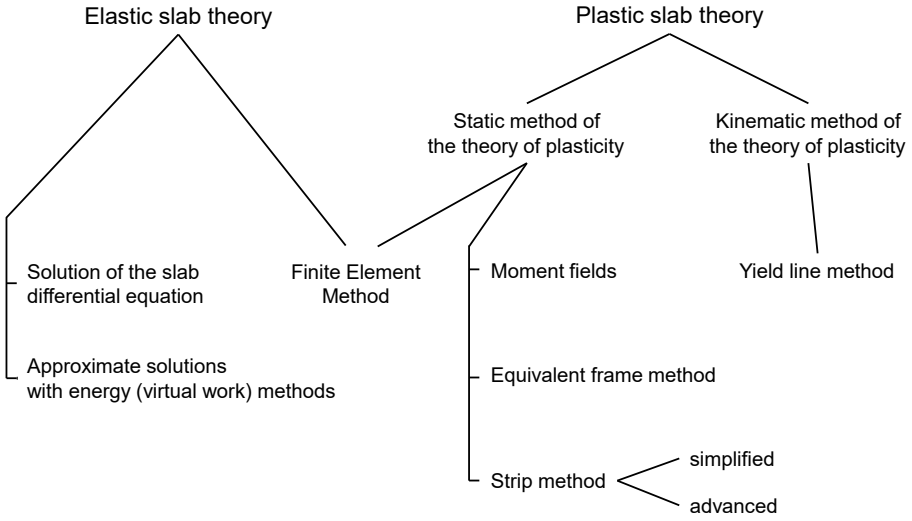

This chapter examines the load carrying capacity of thin slabs with small deflections. An ideally plastic material behaviour is assumed, without going into detail with respect to deformation demands and deformation capacity. As slabs are generally weakly reinforced, there is usually little cause for concern in this respect.

Slabs are the most widespread use of reinforced concrete. In keeping with their importance, they were already dealt with in detail in Stahlbeton II, and further information is given in this chapter. First, the basic static relationships are established, from which the yield conditions can be derived.

In practice, numerical methods, in particular the finite element method, are mostly used today to determine the stresses. For plausibility checks, appropriate approximate methods such as the equivalent frame method are suitable.

In plastic slab theory, static, and kinematic calculation methods are used to determine the load carrying capacity.

For design, usually only the state of bending of the slab is considered. The influence the shear forces is usually only critical for concentrated forces and supports (punching).

Slabs - Basics

Plane elements - Stress resultants

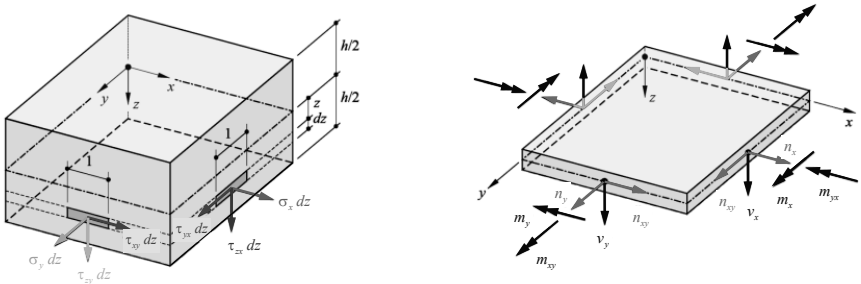

$$m_x = \int_{-h/2}^{h/2} \sigma_x z\,dz, \quad m_y = \int_{-h/2}^{h/2} \sigma_y z\,dz, \quad m_{xy} = m_{yx} = \int_{-h/2}^{h/2} \tau_{xy} z\,dz \quad [\text{kNm/m} = \text{kN}]$$

$$v_x = \int_{-h/2}^{h/2} \tau_{zx}\,dz, \quad v_y = \int_{-h/2}^{h/2} \tau_{zy}\,dz \quad [\text{kN/m}]$$

Bending stress state (slab): bending moments and shear forces

$$n_x = \int_{-h/2}^{h/2} \sigma_x\,dz, \quad n_y = \int_{-h/2}^{h/2} \sigma_y\,dz, \quad n_{xy} = n_{yx} = \int_{-h/2}^{h/2} \tau_{xy}\,dz \quad [\text{kN/m}]$$

Membrane stress state (membrane element): membrane forces (normal/shear forces)

The stresses acting in the sectional surfaces of a slab element can be combined to stress resultants according to the figure.

There are bending and twisting moments, as well as shear forces, corresponding to the bending stress state. Furthermore, there are membrane forces, corresponding to the membrane stress state. In the following, we consider slabs stressed primarily perpendicular to their mid-plane, so that a bending stress state prevails in the slabs. Membrane forces are therefore ignored for the time being.

NB: Analogously to beam theory, $\sigma_z = \sigma_3$ is neglected. Thus, in each plane z = const. and there is a plane stress state.

Slabs - Basics

Plane elements - Stress resultants

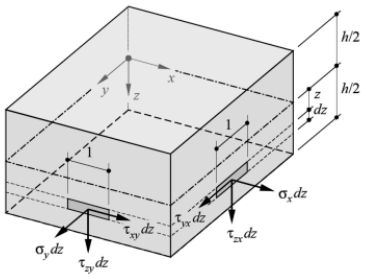

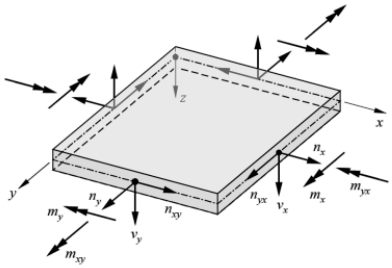

$$m_x = \int_{-h/2}^{h/2} \sigma_x z\, dz, \quad m_y = \int_{-h/2}^{h/2} \sigma_y z\, dz, \quad m_{xy} = m_{yx} = \int_{-h/2}^{h/2} \tau_{xy} z\, dz$$

$$v_x = \int_{-h/2}^{h/2} \tau_{zx}\, dz, \quad v_y = \int_{-h/2}^{h/2} \tau_{zy}\, dz$$

$$n_x = \int_{-h/2}^{h/2} \sigma_x\, dz, \quad n_y = \int_{-h/2}^{h/2} \sigma_y\, dz, \quad n_{xy} = n_{yx} = \int_{-h/2}^{h/2} \tau_{xy}\, dz$$

Sign convention

- Positive stresses act on elements with positive outer normal direction in positive axis direction
- Positive membrane and shear forces correspond to positive associated stresses
- Positive moments correspond to positive associated stresses for z > 0
- Indices: 1st index: direction of stress
  2nd index: normal direction of the element at which stress is applied

For stresses and stress resultants, the sign conventions illustrated in the figure are used. Positive stresses act on elements with a positive outer normal direction in the positive coordinate direction. For normal stresses this means that tensile stresses are positive. Positive membrane and shear forces correspond to positive stresses. Positive moments correspond to positive stresses for positive values of the coordinate *z*. In case of double indices, the first index represents the direction in which the stress acts. The second index designates the normal direction of the surface element on which the stress acts. If both indices are identical, one is omitted.

5 Slabs

In-depth study and additions to Stahlbeton II

5.1 Equilibrium conditions

Slabs - Equilibrium

Equilibrium conditions - Cartesian coordinates

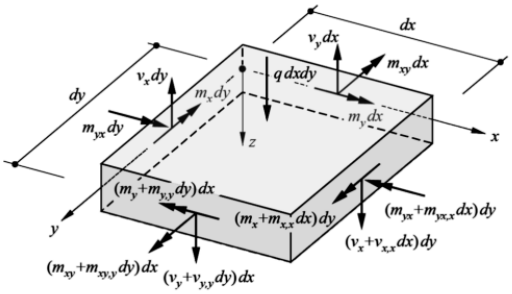

Equilibrium condition for slabs:

$$\underbrace{\frac{\partial^2 m_x}{\partial x^2}}_{\text{beam in x-direction}} + \underbrace{2\frac{\partial^2 m_{xy}}{\partial x \partial y}}_{\text{additionally: twisting moments}} + \underbrace{\frac{\partial^2 m_y}{\partial y^2}}_{\text{beam in y-direction}} + q = 0$$

Derivation via equilibrium at the differential slab element:

$$-v_x\,dy - v_y\,dx + \left(v_y + \frac{\partial v_y}{\partial y}dy\right)dx + \left(v_x + \frac{\partial v_x}{\partial x}dx\right)dy + q\,dxdy = 0 \quad \longrightarrow \quad \frac{\partial v_x}{\partial x} + \frac{\partial v_y}{\partial y} + q = 0$$

$$-m_x\,dy - m_{xy}\,dx + \left(m_x + \frac{\partial m_x}{\partial x}dx\right)dy + \left(m_{xy} + \frac{\partial m_{xy}}{\partial y}dy\right)dx - v_x dydx = 0 \quad \longrightarrow \quad \frac{\partial m_x}{\partial x} + \frac{\partial m_{xy}}{\partial y} - v_x = 0$$

$$-m_y\,dx - m_{yx}\,dy + \left(m_y + \frac{\partial m_y}{\partial y}dy\right)dx + \left(m_{yx} + \frac{\partial m_{yx}}{\partial x}dx\right)dy - v_y dxdy = 0 \quad \longrightarrow \quad \frac{\partial m_y}{\partial y} + \frac{\partial m_{yx}}{\partial x} - v_y = 0$$

terms with $(dx)^2$ or $(dy)^2$ neglected

The equilibrium of the forces and moments acting on the slab element leads to three equations. By inserting the second and the third equation into the first, the equilibrium condition for slabs in cartesian coordinates is obtained.

Slabs - Equilibrium

Stress transformation: Bending and twisting moments

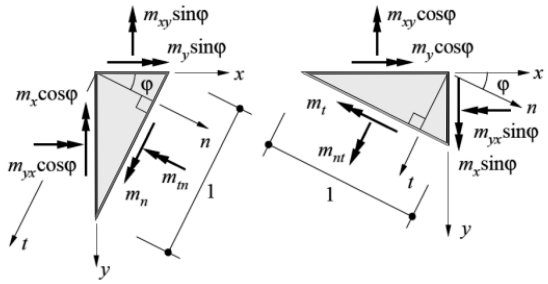

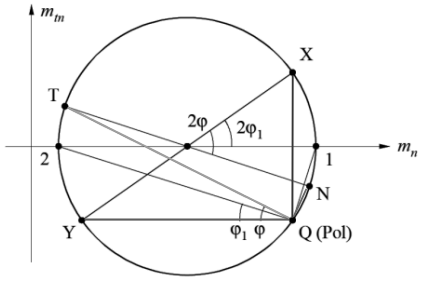

Bending and twisting moments in any direction φ:

$$m_n = m_x \cos^2\varphi + m_y \sin^2\varphi + m_{xy} \sin 2\varphi$$

$$m_t = m_x \sin^2\varphi + m_y \cos^2\varphi - m_{xy} \sin 2\varphi$$

$$m_{tn} = \left(m_y - m_x\right)\sin\varphi\cos\varphi + m_{xy}\cos 2\varphi$$

NB: $\sin 2\varphi = 2\sin\varphi\cos\varphi,\ \cos 2\varphi = \cos^2\varphi - \sin^2\varphi$

Principal direction φ_1 (twisting moments = 0) and principal moments (Mohr's circle):

$$\tan 2\varphi_1 = \frac{2m_{xy}}{m_x - m_y}$$

$$m_{1,2} = \frac{m_x + m_y}{2} \pm \frac{\sqrt{\left(m_x - m_y\right)^2 + 4m_{xy}^2}}{2}$$

The moment equilibrium at the slab elements shown in the figure leads to relationships which serve as transformation formulas for bending and twisting moments. Any section with the normal *n*, whose direction is defined by the angle φ, can be considered. The moments can be represented with the help of a Mohr's circle. Twisting moments are calculated positively here if the corresponding positive (right-turning) moment arrow points in the direction of the observed edge (other than the standard sign convention, just as for shear stresses in Mohr's circle of stresses).

The principal direction for which the twisting moments disappear can be determined graphically using Mohr's circle as well as analytically (as well as the corresponding principal moments m_1 und m_2).

Slabs - Equilibrium

Stress transformation: Shear forces

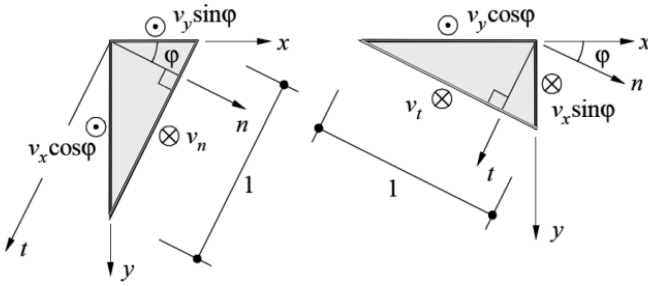

Shear forces in any direction φ:

$$v_n = v_x \cos\varphi + v_y \sin\varphi$$

$$v_t = -v_x \sin\varphi + v_y \cos\varphi$$

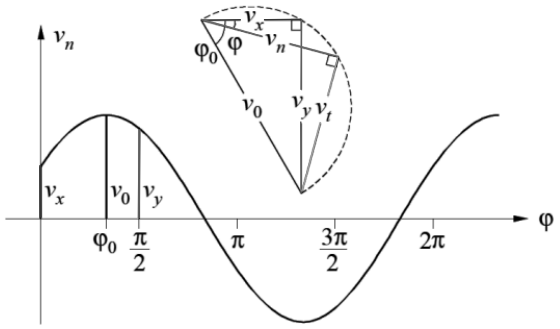

Principal shear force and associated direction φ_0 (interpretation with Thales' circle):

$$v_0 = \sqrt{v_x^2 + v_y^2}$$

$$\tan\varphi_0 = \frac{v_y}{v_x}$$ (generally $\varphi_0 \neq \varphi_1$)

Analogously to the moments, the equilibrium of the vertical forces on the slab element can be established. This leads to transformation rules for shear forces at any section with the normal *n* at the angle φ. The trigonometric functions can be interpreted using Thales' circle. A principal shear force v_0 is transmitted in the direction φ_0 at each point of the slab. No shear force is transmitted perpendicular to this direction. The principal directions of the shear forces and moments coincide only in special cases, in general $\varphi_0 \neq \varphi_1$.

Slabs - Boundary conditions

Boundary conditions based on equilibrium

Static method of the theory of plasticity - Explanation of load-bearing effect in the region of slab edges, which is based only on equilibrium considerations:

→ From equilibrium in a narrow edge zone of the slab, one gets the edge transverse force: $V_t = -m_{tn}$

→ *If*: The slab edge is stress-free and the stresses σ_t occurring in the edge zone do not change in the *t* direction (Clyde, 1979).

→ From the boundary shear force $V_t = -m_{tn}$, one gets the corner forces 2 m_{tn} and the contribution of $m_{tn,t}$ to the support force.

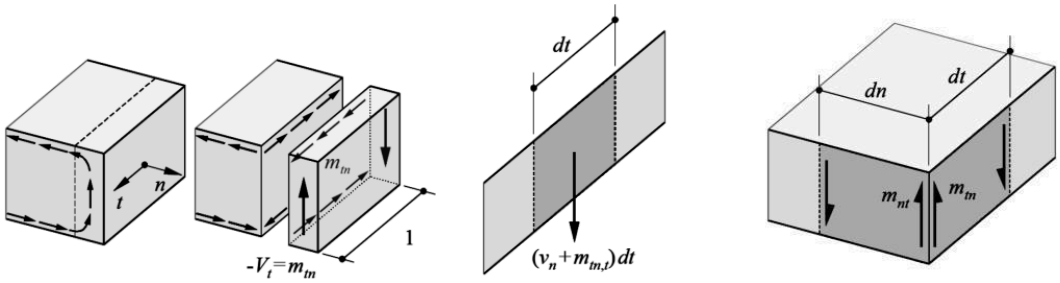

shear force in boundary zone *support force* *corner force*

The forces that generally act at the edge of a slab are a bending moment m_n, a twisting moment $m_{tn.}$, and a shear force v_n. According to Kirchhoff, for thin elastic slabs with small deflections, an inhomogeneous bipotential equation is obtained for the deflections of the slab. Its solution can only be adapted to two boundary conditions. For this reason, a further condition is introduced for the treatment of simply supported and free slab edges. The twisting moments m_{tn} are replaced by a continuous distribution of vertical pairs of forces, whereby at the boundaries between the infinitesimal elements of length *dt* the forces cancel each other out except for the increase $m_{tn,t} \cdot dt$. *The* increase per unit length $m_{tn,t}$ is now combined with the shear force v_n *to* form a support force $v_n + m_{tn,t} = m_{n,n} + 2m_{nt,t}$. The described treatment of twisting moments at the slab edge goes back to Thomson and Tait (1883) and can be justified with the Saint-Venant principle.

However, from the perspective of the static method of the theory of plasticity, an explanation of the load-bearing effect based only on equilibrium considerations is preferable. This is illustrated in the figure. By equilibrium, an edge force $V_t = -m_{tn}$ must exist in a narrow edge zone of the slab, provided that the slab edge is stress-free and the stresses occurring in the edge zone do not change in the *t* direction. From the existence of the boundary shear forces V_t, corner forces 2 m_{tn} and the contribution $m_{tn,t}$ of the twisting moments to the support force are obtained, again by equilibrium.

Slabs - Boundary conditions

Boundary conditions on the basis of equilibrium considerations

→ Boundary conditions based on equilibrium considerations:

- Clamped edge: m_n, m_{tn} and v_n arbitrary
- Simply supported edge: $m_n = 0$, resulting support force:

$$v_n + \frac{\partial m_{tn}}{\partial t} = \frac{\partial m_n}{\partial n} + 2\frac{\partial m_{nt}}{\partial t}$$

- Free edge: $m_n = 0$, disappearing support force:

$$v_n + \frac{\partial m_{tn}}{\partial t} = \frac{\partial m_n}{\partial n} + 2\frac{\partial m_{nt}}{\partial t} = 0$$

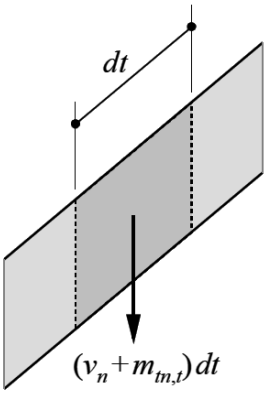

support force

The corresponding boundary conditions can be summarised as shown in the figure. These result from pure equilibrium considerations and are, therefore, valid for any material behaviour. For thin elastic slabs, stricter boundary conditions can be formulated. However, these are not relevant for the treatment according to the theory of plasticity.

Slabs - Boundary conditions

Edge reinforcement

If twisting moments are calculated along simply supported and free edges, a reinforcement must be arranged to carry $V_t = -m_{tn}$.

Figure (corner, pure twisting):

→ Upper and lower side: concrete struts perpendicular to each other, inclined at 45° to the edges of the slabs, support of components normal to the edge by the longitudinal reinforcement.

→ Components in the direction of the slab edges are transferred to the edge members by inclined concrete compression struts. Vertical components correspond to the edge shear forces $V_t = -m_{tn}$

→ Carrying $V_t = -m_{tn}$ with shear reinforcement or correspondingly detailed bending reinforcement (e.g. «hairpins»).

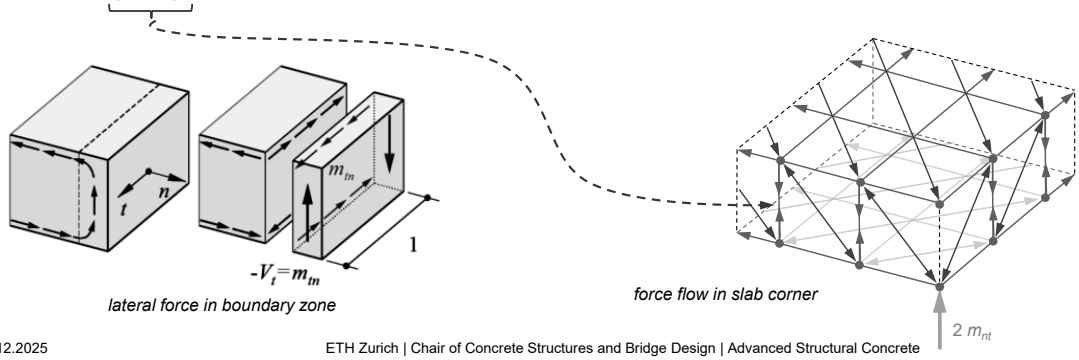

The edge shear forces are to be taken into account when dimensioning the reinforcement along simply supported and free edges of reinforced concrete slabs. The figure shows the force flow of a rectangular slab subjected to pure twisting, which can be represented with a truss model.

On the top and bottom of the slab, concrete struts are formed which are perpendicular to each other and inclined at 45° to the slab edges. The components of these struts in the direction normal to the slab edge are carried by the longitudinal reinforcement. The components in the direction of the slab edges are transmitted to the edge strips via inclined concrete compression struts. Their vertical component, which corresponds to the edge shear force, must be supported by vertical reinforcement. This can be realised with shear reinforcement or by detailing the bending reinforcement accordingly. It can also be seen that the two edge shear forces meeting in the corner of the element are not in equilibrium, but add up to a corner force of 2 m_{nt}.

Slabs - Boundary conditions

Discontinuities

Static discontinuity lines are admissible inside the slab (↔ Equivalence of twisting moments at the slab edge and edge shear forces, joining two free slab edges).

At discontinuity lines

→ Bending moments m_n must be continuous ($m_n^+ = m_n^-$)

→ Twisting moments m_{nt} and shear forces v_n may be discontinuous (jump) ($m_{nt}^+ \neq m_{nt}^-$, $v_n^+ \neq v_n^-$)

Thus, for a static discontinuity line along which an edge shear force V_t is applied, the following conditions apply:

$$m_n^- = m_n^+$$

$$V_t = m_{nt}^+ - m_{nt}^-$$

$$\frac{\partial V_t}{\partial t} = v_n^- - v_n^+$$

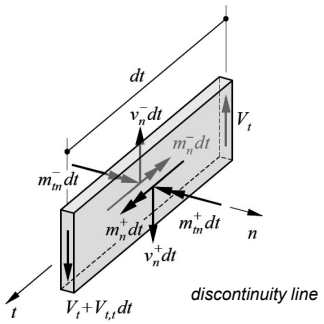

The equivalence of twisting moments at the slab edge and edge shear forces (according to the edge transverse force $V_t = -m_{tn}$) was concluded on the previous slide. If one combines (in mind) two slabs at their free edges, a discontinuity line is created (note that slab edges represent discontinuities at which generally a bending moment m_n, a twisting moment m_{tn} and a shear force v_n *acts)*. It can be concluded that at static discontinuity lines in the interior of the slab the bending moments m_n must be continuous, the twisting moments m_{nt} and the shear forces v_n, on the other hand, may jump. At a static discontinuity line along which an «edge» shear force V_t is transferred, the relationships according to the figure must be satisfied.

5 Slabs

In-depth study and additions to Stahlbeton II

5.2 Yield conditions

Slabs - Yield conditions

Yield conditions of Tresca and von Mises for isotropic slabs (steel etc.)
(not suitable for reinforced concrete, even with "isotropic reinforcement"!)

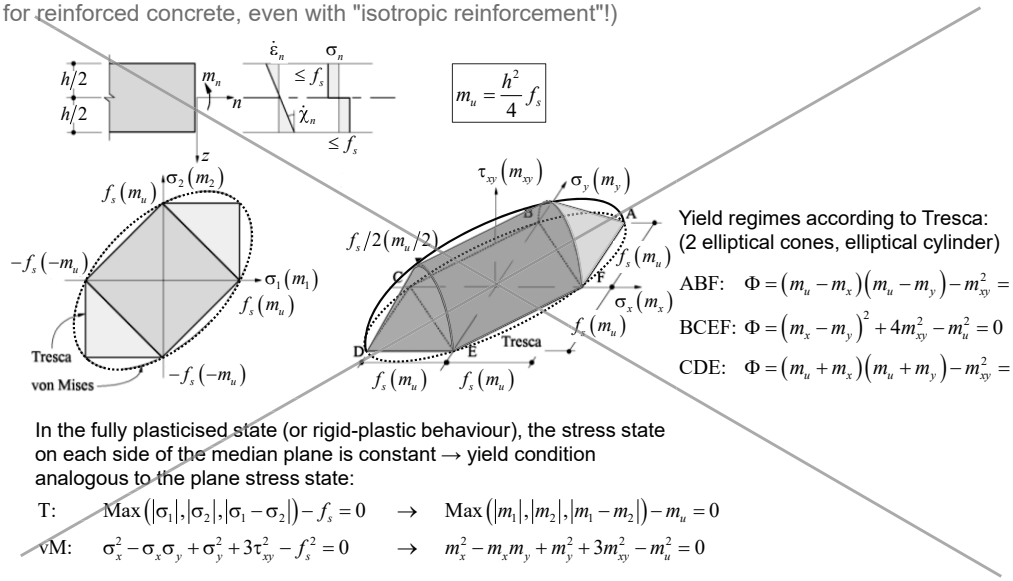

In the fully plasticised state (or rigid-plastic behaviour), the stress state on each side of the median plane is constant → yield condition analogous to the plane stress state:

T: $\text{Max}(|\sigma_1|, |\sigma_2|, |\sigma_1 - \sigma_2|) - f_s = 0 \quad \rightarrow \quad \text{Max}(|m_1|, |m_2|, |m_1 - m_2|) - m_u = 0$

vM: $\sigma_x^2 - \sigma_x \sigma_y + \sigma_y^2 + 3\tau_{xy}^2 - f_s^2 = 0 \quad \rightarrow \quad m_x^2 - m_x m_y + m_y^2 + 3m_{xy}^2 - m_u^2 = 0$

Yield conditions for isotropic materials cannot be used for reinforced concrete slabs (not even for "isotropic reinforcement", i.e. bending resistances of equal magnitude in orthogonal directions).

Slabs - Yield conditions

Yield conditions for reinforced concrete slabs

Bending resistances $m_{x,u}$ and $m_{y,u}$ of an orthogonally reinforced slab (reinforcement in *x*- and *y*-direction):

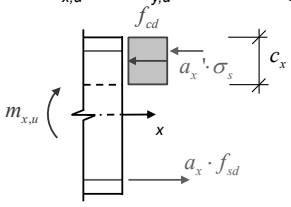

Cross-Section x-direction

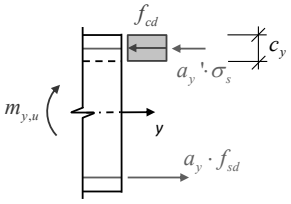

Cross-Section y-direction

Without normal forces, the compression zone heights c_x and c_y and thus $m_{x,u}$ and $m_{y,u}$ result from equilibrium.

Since reinforcement is orthogonal: $m_{xy,u} = 0$

By superposition of the bending resistances in the reinforcement directions and transformation in any direction (analogous to the stress transformations) the bending and twisting moments m_n , m_t and m_{nt} in *n*- and *t*-direction (statically admissible stress state) are obtained:

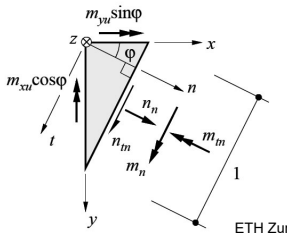

$$m_n = m_{xu} \cdot \cos^2 \varphi + m_{yu} \cdot \sin^2 \varphi$$

$$m_t = m_{xu} \cdot \sin^2 \varphi + m_{yu} \cdot \cos^2 \varphi$$

$$m_{nt} = \left(m_{yu} - m_{xu}\right) \cdot \sin\varphi \cdot \cos\varphi$$

All membrane forces disappear:

$$n_t = n_n = n_{nt} = 0$$

The bending resistances of an orthogonally reinforced slab can be determined independently in *x*- and *y*-direction. The compression zone heights c_x and c_y and thus m_{xu} und m_{yu} are determined by equilibrium at the cross-section. Since the reinforcement is arranged orthogonally, the twisting moment m_{xy} in the corresponding directions is equal to zero.

By superimposing the plastic moments m_{xu} and m_{yu} in the reinforcement directions with $n_{xy} = n_x = n_y = 0$, a statically admissible stress state is obtained in the element. The bending and twisting moments corresponding to this stress state can be determined in any direction *n* analogous to the stress transformation.

Slabs - Yield conditions

Yield conditions for reinforced concrete slabs

The resistance is checked on the basis of the normal moments ("normal moment yield condition").

If the compression zone depths are equal, i.e. $c_x = c_y$ the complete solution results:

- Statically admissible stress state (equilibrium)
- Kinematically compatible failure mechanism (yield line, see later)

$$m_{n,u} = m_{x,u} \cdot \cos^2 \varphi + m_{y,u} \cdot \sin^2 \varphi \qquad m'_{n,u} = m'_{x,u} \cdot \cos^2 \varphi + m'_{y,u} \cdot \sin^2 \varphi$$

$$m_{t,u} = m_{x,u} \cdot \sin^2 \varphi + m_{y,u} \cdot \cos^2 \varphi \qquad m'_{t,u} = m'_{x,u} \cdot \sin^2 \varphi + m'_{y,u} \cdot \cos^2 \varphi$$

Bending resistance for positive bending moments

Bending resistance for negative bending moments («‘») (the sign of the bending resistance is defined positive)

For $c_x \neq c_y$ the statically admissible stress state provides a lower limit for the ultimate load:

$$m_{n,u} \geq m_{x,u} \cdot \cos^2 \varphi + m_{y,u} \cdot \sin^2 \varphi \qquad m'_{n,u} \geq m'_{x,u} \cdot \cos^2 \varphi + m'_{y,u} \cdot \sin^2 \varphi$$

$$m_{t,u} \geq m_{x,u} \cdot \sin^2 \varphi + m_{y,u} \cdot \cos^2 \varphi \qquad m'_{t,u} \geq m'_{x,u} \cdot \sin^2 \varphi + m'_{y,u} \cdot \cos^2 \varphi$$

The differences with regard to the compression zone depths in *x*- and *y*-direction are usually small so that the inequality sign may be suppressed with good approximation.

NB: With a definition range for the angle φ of $\{0 \leq \varphi \leq \pi\}$, the relationship for m_n is sufficient.

The load bearing capacity is checked using the normal moment yield condition, which assumes that failure can only occur through the formation of a yield line. If the compression zone depths in *x*- and *y*-direction is the same, i.e. $c_x = c_y$, a kinematically compatible failure mechanism (yield line, see later) can be found for the statically admissible stress state. This is therefore the complete solution.

In general, the compression zone depths in the two reinforcement directions are different, $c_x \neq c_y$, and no compatible failure mechanism can be assigned to the considered stress state. The determined value for m_n is thus a lower limit value for the bending resistance m_{nu} in the direction *n*. The deviations for $c_x \neq c_y$ are usually very small, and the inequality sign can therefore be suppressed.

The derivation of the formula for negative bending moments is analogous to that for positive moments, whereby the negative bending moments are also defined positively here, $m'_n > 0$.

Additional remark

– "Normal moments" are *bending* moments (to distinguish them from *twisting* moments). The normal moment yield condition verifies that the normal moment (bending moment) in each direction is smaller than the bending resistance.

Slabs - Yield conditions

Yield conditions for reinforced concrete slabs

The action m_n in the relevant direction φ_u is set equal to the resistance $m_{n,u}$ obtaining:

$$m_{x,u} \cdot \cos^2 \varphi_u + m_{y,u} \cdot \sin^2 \varphi_u = m_{n,u} \overset{!}{=} m_n = m_x \cdot \cos^2 \varphi_u + m_y \cdot \sin^2 \varphi_u + 2m_{xy} \cdot \sin \varphi_u \cos \varphi_u$$

Considering that the condition $m_{n,u} \geq m_n$ must be satisfied for all directions φ, the result is (*):

for positive bending moments:

$$\left|\tan \varphi_u\right| = \sqrt{\frac{\left(m_{x,u} - m_x\right)}{\left(m_{y,u} - m_y\right)}}$$

$$\boxed{\begin{aligned} m_{x,u} &= m_x + m_{xy} \cdot \tan \varphi_u \\ m_{y,u} &= m_y + m_{xy} \cdot \cot \varphi_u \end{aligned}}$$

resistance actions

for negative bending moments:

$$\left|\tan \varphi'_u\right| = \sqrt{\frac{\left(m'_{x,u} + m_x\right)}{\left(m'_{y,u} + m_y\right)}}$$

$$\boxed{\begin{aligned} m'_{x,u} &= -m_x - m_{xy} \cdot \tan \varphi'_u \\ m'_{y,u} &= -m_y - m_{xy} \cdot \cot \varphi'_u \end{aligned}}$$

resistance actions

(*) In the relevant direction φ_u (point of contact of $m_{n,u}(\varphi)$ and $m_n(\varphi)$) the difference $m_{n,u} - m_n$ is minimum, thus:

$$m_{n,u}(\varphi) - m_n(\varphi) = \min! \quad \rightarrow \frac{\partial}{\partial \varphi}\left(m_{n,u}(\varphi) - m_n(\varphi)\right) = 0, \quad \frac{\partial}{\partial \varphi} m_{n,u}(\varphi) = \frac{\partial}{\partial \varphi} m_n(\varphi) \quad \rightarrow m_{y,u} - m_{x,u} = m_y - m_x + m_{xy}\left(\cot \varphi_u - \tan \varphi_u\right)$$

after some transformation the specified relations follow by resubstitution.

Slabs - Yield conditions

Yield conditions for reinforced concrete slabs

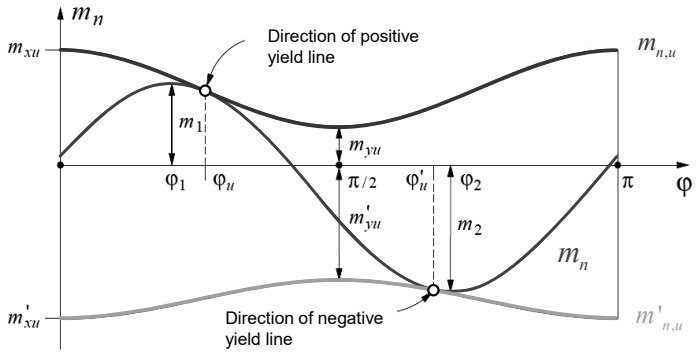

Bending moments m_n as a function of φ → Controlling direction φ_u

φ_1, φ_2 → Directions in which the acting positive or negative moment becomes maximum (principal directions for m_n)
φ_u, φ'_u → Directions in which the action curve touches the resistance curve, i.e. $m_n = m_{n,u}$

Generally $\varphi_1 \neq \varphi_u$ resp. $\varphi_2 \neq \varphi'_u$ → Dimensioning of $m_{n,u}$ based on principal moment m_1 is not conservative!

For a stress state given by the moments m_x, m_y and m_{xy} the moment $m_n = m_x \cdot \cos^2(\varphi) + m_y \cdot \sin^2(\varphi) + 2 \cdot m_{xy} \cdot \sin(\varphi) \cdot \cos(\varphi)$ varies depending on the direction φ. The resistance varies according to the yield condition $m_{nu} = m_{xu} \cdot \cos^2(\varphi) + m_{yu} \sin^2(\varphi)$ also with φ. Thus, a yield line forms at the point of contact of the two curves of action and resistance. The corresponding angle φ_u determines the direction of the yield line. It should be noted that in general the direction of the maximum moment (principal direction of moments φ_1) does not coincide with the direction of the yield line. A dimensioning of the structure to the principal moment is therefore not on the safe side.

Additional remark

- Since the angle φ is measured from the *x*-direction (= reinforcement direction), the maxima and minima of $m_{n,u}$ and $m'_{n,u}$ respectively are $\varphi = 0$ and $\varphi = \pi/2$ (*x*- and *y*-direction).
- Maximum and minimum moment m_n occur in different directions φ_1 and φ_2 (except for $m_{xy} = 0$) .
- In general, the yield condition is only achieved for positive or negative moments (figure shows special case of optimal design).

Slabs - Yield conditions

Normal moment yield criterion

If φ_u and φ'_u are eliminated from the previous equations, the normal moment yield criterion results: $-m'_{n,u} \le m_n \le m_{n,u}$

$$\boxed{\begin{aligned} Y &= m_{xy}^2 - \overbrace{\left(m_{x,u} - m_x\right)}^{\ge 0}\overbrace{\left(m_{y,u} - m_y\right)}^{\ge 0} = 0 \\ Y' &= m_{xy}^2 - \underbrace{\left(m'_{x,u} + m_x\right)}_{\ge 0}\underbrace{\left(m'_{y,u} + m_y\right)}_{\ge 0} = 0 \end{aligned}}$$

If $Y \le 0$ and $Y' \le 0$, the yield condition is fulfilled.

The normal moment yield condition forms two elliptical cones in (m_x, m_y, m_{xy}) space. On the conical surfaces $\chi_x\, \chi_y = 0$ (from yield law), i.e. one of the two principal curvatures disappears. The compatible mechanisms therefore correspond to developable surfaces.

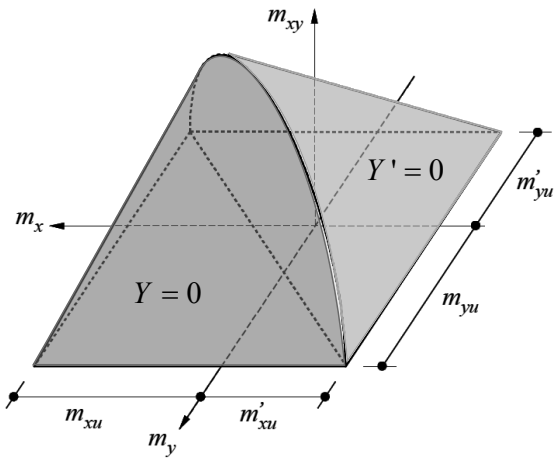

The yield condition for positive moments $m_{nu} \ge m_n$ can also be expressed as a moment tensor:

$$m_{n,u} - m_n = \begin{bmatrix} \cos(\varphi) & \sin(\varphi) \end{bmatrix} \cdot \begin{bmatrix} m_{xu} - m_x & m_{xy} \\ m_{xy} & m_{yu} - m_y \end{bmatrix} \cdot \begin{bmatrix} \cos(\varphi) \\ \sin(\varphi) \end{bmatrix} = 0$$

The equation is satisfied when the determinant of the tensor becomes zero. From this, the yield conditions in the form $Y = 0$ can be derived directly. The derivation is the same for negative moments.

According to the theory of plastic potential, the following curvature increments are assigned to the yield surfaces $Y = 0$ via the associated flow rule ($\lambda \ge 0$):

$$\dot{\chi}_x = \lambda \cdot \frac{\partial Y}{\partial m_x} = \lambda \cdot \left(m_{yu} - m_y\right) \qquad \dot{\chi}_y = \lambda \cdot \frac{\partial Y}{\partial m_y} = \lambda \cdot \left(m_{xu} - m_x\right) \qquad 2 \cdot \dot{\chi}_{xy} = \lambda \cdot \frac{\partial Y}{\partial m_{xy}} = 2 \cdot \lambda \cdot m_{xy}$$

It follows $\dot{\chi}_x \cdot \dot{\chi}_y = \dot{\chi}_{xy}^2$. The transformation in the principal directions ultimately leads to $\dot{\chi}_1 \cdot \dot{\chi}_2 = 0$

This means one of the principal curvatures disappears. Thus, compatible failure mechanisms correspond to kinematically admissible deformation states in the form of developable surfaces.

Slabs - Yield conditions

Normal moment yield criterion

If φ_u and φ'_u are eliminated from the previous equations, the normal moment yield criterion results: $-m'_{n,u} \le m_n \le m_{n,u}$

$$Y = m_{xy}^2 - \left(m_{x,u} - m_x\right)\left(m_{y,u} - m_y\right) = 0 \quad (\ge 0,\ \ge 0)$$

$$Y' = m_{xy}^2 - \left(m'_{x,u} + m_x\right)\left(m'_{y,u} + m_y\right) = 0 \quad (\ge 0,\ \ge 0)$$

Dito, with notations according to SIA 262:

$$Y = m_{xy,d}^2 - \left(m_{x,Rd} - m_{x,d}\right)\left(m_{y,Rd} - m_{y,d}\right) = 0 \quad (\ge 0,\ \ge 0)$$

$$Y' = m_{xy,d}^2 - \left(m'_{x,Rd} + m_{x,d}\right)\left(m'_{y,Rd} + m_{y,d}\right) = 0 \quad (\ge 0,\ \ge 0)$$

The expressions of the yield conditions are analogous to the notation according to SIA 262. According to SIA 262 the acting moments $m_{x,d}$, $m_{y,d}$ and $m_{xy,d}$ ("design") as well as the bending resistances $m_{x,Rd}$ and $m_{y,Rd}$ ("Resistance") are calculated at the design level.

NB. In the structural Eurocodes, the indices of the design moments are «Ed» instead of just «d».

Slabs - Yield conditions

Design moments

The normal moment yield criterion in parametric form: with $k = |\tan\varphi_u|$ and with $k' = |\tan\varphi'_u|$

The resulting design moments:

for positive bending moments:

$$m_{x,u} \geq m_x + k \cdot |m_{xy}|$$
$$m_{y,u} \geq m_y + \frac{1}{k} \cdot |m_{xy}|$$

for negative bending moments:

$$m'_{x,u} \geq -m_x + k' \cdot |m_{xy}|$$
$$m'_{y,u} \geq -m_y + \frac{1}{k'} \cdot |m_{xy}|$$

The parameter *k* can be freely selected and the reinforcement can be designed directly. If *k* = 1, the linearised yield condition follows, which is also used by many FE programs.

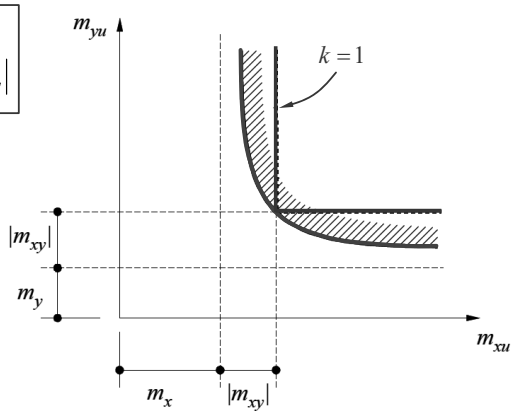

The normal moment yield criterion can be written in parametric form, with the substitutions of $k = |\tan\varphi_u|$ and $k' = |\tan\varphi'_u|$. The parameters *k* and *k*' can be freely selected and often $k = k' = 1$ is set. The linearised yield condition according to the figure follows. It is also used in many FE programs.

The normal moment yield condition overestimates the resistance for large twisting moments with respect to the reinforcement directions as well as for high reinforcement ratios. In many cases, this overestimation is compensated by the favourable effect of the membrane forces, which are usually neglected in the design. However, caution is required with corner supports in the immediate vicinity of which there is an approximate state of pure twisting. This statement already made in Stahlbeton II, i.e. that the normal moment yield condition overestimates the twisting resistance of slabs, is derived on slides 26ff.

Slabs - Yield conditions

Design moments

The normal moment yield condition in parametric form: with $k = \left|\tan \varphi_u\right|$ and with $k' = \left|\tan \varphi'_u\right|$

The resulting design moments:

for positive bending moments:

$$\begin{aligned} m_{x,u} &\geq m_x + k \cdot \left|m_{xy}\right| \\ m_{y,u} &\geq m_y + \frac{1}{k} \cdot \left|m_{xy}\right| \end{aligned}$$

for negative bending moments:

$$\begin{aligned} m'_{x,u} &\geq -m_x + k' \cdot \left|m_{xy}\right| \\ m'_{y,u} &\geq -m_y + \frac{1}{k'} \cdot \left|m_{xy}\right| \end{aligned}$$

Dito, with notations according to SIA 262:

$$\begin{aligned} m_{x,Rd} &\geq m_{x,d} + k \cdot \left|m_{xy,d}\right| \\ m_{y,Rd} &\geq m_{y,d} + \frac{1}{k} \cdot \left|m_{xy,d}\right| \end{aligned}$$

$$\begin{aligned} m'_{x,Rd} &\geq -m_{x,d} + k' \cdot \left|m_{xy,d}\right| \\ m'_{y,Rd} &\geq -m_{y,d} + \frac{1}{k'} \cdot \left|m_{xy,d}\right| \end{aligned}$$

NB: For several loads or load combinations the required bending resistance $(m_x, m_y)_{Rd}$ should be determined for concomitant internal forces $(m_x, m_y, m_{xy})_d$, i.e., stress resultants obtained for the same load combination. The determination of the required bending resistances $(m_x, m_y)_{Rd}$ implemented in many FE programs from separately determined "limit values" for non-associated $m_{x,d}$, $m_{y,d}$ and $m_{xy,d}$ is often strongly on the safe side.

The notations according to SIA 262 are analogous to the yield condition.

If several load combinations are used, the required bending resistance $(m_x, m_y)_{Rd}$ should be determined for concomitant internal forces $(m_x, m_y, m_{xy})_d$. In many FE programs, however, the determination of the bending resistances $(m_x, m_y)_{Rd}$ from separately determined "limit values" for each individual moment action m_{xd}, m_{yd} and m_{xyd} is implemented. This procedure is often strongly on the safe side.

Slabs - Yield conditions

In-class exercise

Given: Square slab supported at 3 corners with side length l, acting corner force Q = 100 kN
Desired: Design moments for reinforcement in coordinate direction.

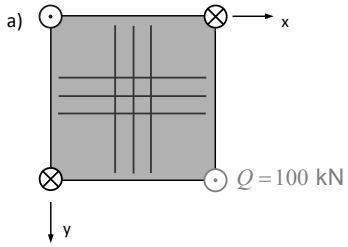

Hint: from the boundary shear force $V_t = -m_{tn}$, one gets the corner forces 2 m_{tn}

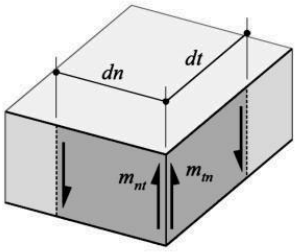

corner force

The example shows a square slab with the side length *l,* which is point supported in three corners. A single load *Q* is acting in the fourth corner. For reasons of symmetry, the support reactions are ±*Q*.

Slabs - Yield conditions

Design moments - Example

Given: Square slab supported at 3 corners with side length l, acting corner force Q = 100 kN

Desired: Design moments for reinforcement in coordinate direction and at 45° to it

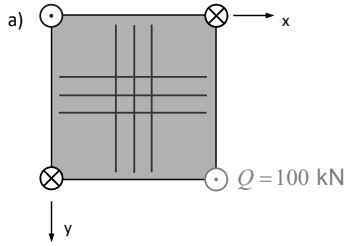

Action: Corner force $2m_{xy} = Q = 100$ kN
(→ pure twisting with respect to the reinforcement directions (*x,y*))

$m_x = m_y = 0$

$m_{xy} = 50$ kN

Linearised yield conditions (k = 1):

$m_{x,u} \geq m_x + k \cdot |m_{xy}| = 0 + 50 = 50$ kN

$m_{y,u} \geq m_y + \frac{1}{k} \cdot |m_{xy}| = 0 + 50 = 50$ kN

$m'_{x,u} \geq -m_x + k' \cdot |m_{xy}| = 0 + 50 = 50$ kN

$m'_{y,u} \geq -m_y + \frac{1}{k'} \cdot |m_{xy}| = 0 + 50 = 50$ kN

→ All four reinforcement layers (top and bottom in *x*- and *y*-direction) have to be dimensioned for $m_u \geq 50$ kN

The example shows a square slab with the side length *l,* which is point supported in three corners. A single load *Q* is acting in the fourth corner. For reasons of symmetry, the support reactions are ±*Q*.

The individual forces acting on the corners are transmitted purely via twisting moments (see slide 11). The bending moments in the direction of the orthogonal reinforcement are thus equal to zero. Using the linearised yield conditions with k = 1, the required cross-sectional resistances can be determined. Here they are the same for positive and negative moments in both directions of the reinforcement.

Slabs - Yield conditions

Design moments - Example

b) Rotation of the reinforcement by 45° to the *n*-*t*-direction

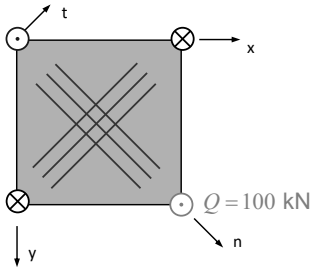

Actions: $\varphi = 45°$

(Reinforcement arranged in principal moment directions!)

$$m_n = m_x \cos^2\varphi + m_y \sin^2\varphi + m_{xy} \sin 2\varphi = m_{xy} = 50 \text{ kN}$$

$$m_t = m_x \sin^2\varphi + m_y \cos^2\varphi - m_{xy} \sin 2\varphi = -m_{xy} = -50 \text{ kN}$$

$$m_{nt} = \left(m_y - m_x\right) \sin\varphi \cos\varphi + m_{xy} \cos 2\varphi = 0$$

Linearised yield conditions:

$$m_{n,u} \geq m_n + k \cdot |m_{nt}| = 50 + 0 = 50 \text{ kN} \qquad m_{t,u} \geq m_t + \frac{1}{k} \cdot |m_{nt}| = -50 + 0 = -50 \text{ kN} \rightarrow 0$$

$$m'_{n,u} \geq -m_n + k' \cdot |m_{nt}| = -50 + 0 = -50 \text{ kN} \rightarrow 0 \qquad m'_{t,u} \geq -m_t + \frac{1}{k'} \cdot |m_{nt}| = 50 + 0 = 50 \text{ kN}$$

→ Half the amount of reinforcement is sufficient for the reinforcement in the principal moment direction: lower reinforcement in the *n*-direction and upper reinforcement in the *t*-direction require each: $m_u \geq 50$ kN (negative design moments: no reinforcement required).

→ "Trajectory reinforcement" optimal, but rarely practicable (complicated reinforcement layout, principal directions change due to changing actions)

If the orthogonal reinforcement is rotated by 45° to the original coordinate direction, the bending and twisting moments must first be transformed in the direction of the reinforcement for the application of the yield conditions (see slide 7). A rotation of 45° means that the state of pure twisting results in a state of pure (anticlastic) bending (see slide 25).

By inserting it into the yield condition, it can be seen that only half of the previously required reinforcement is needed. Statically, only a lower reinforcement in *n*-direction and an upper reinforcement in *t*-direction are necessary.

Although such "trajectory reinforcement" is the most effective in terms of material use, it is less practicable for the actual application (higher effort of the reinforcement layers, different load cases due to variable actions change the respective principal directions).

Additional remark:

- In the yield conditions, *x* and *y* by convention denote the reinforcement directions. Here we deviate from this (*n* and *t* as reinforcement directions)!

Slabs - Yield conditions

Pure twisting $\chi_{xy}\left(\chi_x = \chi_y = 0\right)$

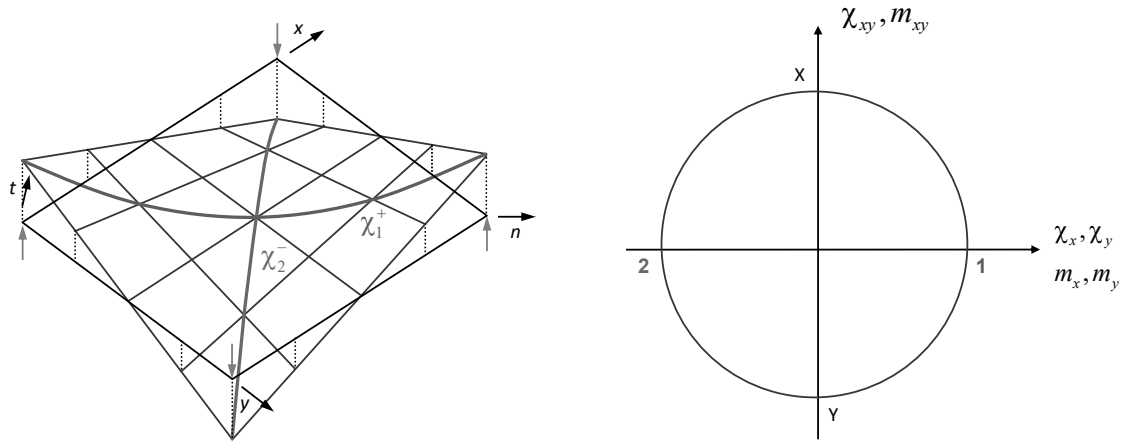

The square slab with alternating positive and negative corner forces carries by pure twisting in the coordinate axes (constant twisting moment). The distortion state can be represented with a Mohr's circle with a centre in the coordinate origin. A 45° rotation of the reference axes leads to the principal directions in which there is pure bending.

The left figure shows the deformations (exaggerated) due to the given load (red point loads). Due to the lack of bending actions, the respective slab strips run straight along the coordinate axes. The deflected shape thus results from the horizontal staggering of straight trajectories. The change of the inclination along the coordinate axes is generated by the twisting moment (twisting = torsion). The blue and green curves show that the slab is curved in the diagonal directions and that there is a pure bending state in these principal directions (anticlastic bending = negative Gauss curvature, i.e. centres of curvature on opposite sides of the middle plane).

Slabs - Yield conditions

Sandwich model

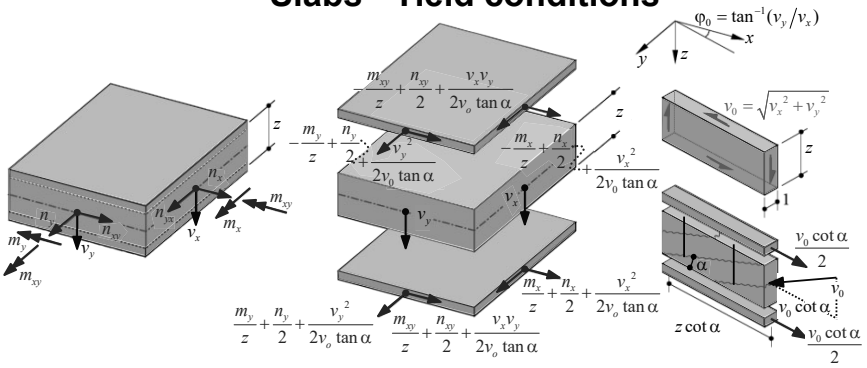

Equilibrium solution for general shell loading (statically admissible stress state):

- Sandwich covers carry bending and twisting moments (substituted by statically equivalent force couples $\pm m/z$ in bottom and top cover) as well as possible membrane forces (substituted by statically equivalent forces $n/2$ in each cover)
  → In-plane loading of each cover, treatment as membrane elements with corresponding reinforcement, dimensioning with yield conditions for membrane elements
  → Suitable for the design of generally loaded shell elements (8 stress resultants)
- Sandwich core absorbs shear forces
  → Sandwich core absorbs principal transverse force v_0 in the direction φ_0 (see transverse shear in slabs)

NB: High membrane (compressive) forces: core can also be used for this (note interaction with v)

The figure shows the sandwich model again, but here with the internal forces of the slab element under general loading (bending stress state and membrane stress state). The general stress state can be divided using equilibrium considerations. The membrane forces and the force couples from the bending and twisting moments are distributed to the sandwich covers (loads acting on sandwich covers are statically equivalent to the applied stress resultants). Each cover is subjected to in-plane loading only and can, therefore, be treated as a membrane element. The design of the reinforcement is based on the yield conditions for membrane elements.

The sandwich core absorbs the transverse (= slab) shear forces. The principal transverse shear force v_0 is carried in direction φ_0. This direction can be treated analogously to the web of a beam (transverse reinforcement analogous to stirrups in a girder web). The resulting longitudinal tensile forces in the «chords» of the «beam» acting in direction φ_0 must be resisted in the slab plane by the sandwich covers. The last terms of the sandwich cover forces shown in the slide correspond to the components of these «chord tensile forces» (see formulas on slide 8 for the components of v_0).

Slabs - Yield conditions

Sandwich model

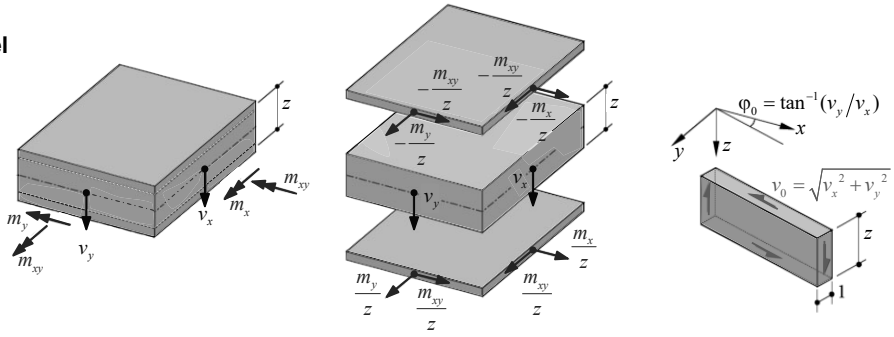

→ Slabs under pure bending without shear reinforcement:
$n_x = n_y = n_{xy} = 0$, $v_{0d} \leq v_{Rd} = k_d \, \tau_{cd} \, d_v$

→ Terms with n_x, n_y, n_{xy} are zero

→ Terms with v_x, v_y are omitted if an uncracked core is assumed.

→ Yield conditions for slabs based on the sandwich model = simplification of the general case of a shell element with eight stress resultants (slab: only bending and twisting moments considered, consideration of transverse (slab) shear forces → see shear force in slabs)

Most slabs are subjected to bending and twisting and are designed without shear reinforcement. The membrane stress state disappears and the shear force is resisted by the shear strength of the concrete (since shear reinforcement in slabs is relatively complex to lay, it is economically advantageous to choose a slab thickness that does not require shear reinforcement at least outside the load application areas. This should only be done for slab thicknesses up to approx. 400 mm).

The internal forces of the sandwich element are simplified in this case: Only one normal and one shear stress component act on the covers in each direction and the transverse shear force is transferred by pure shear stresses in the core.

Slabs - Yield conditions

Sandwich model

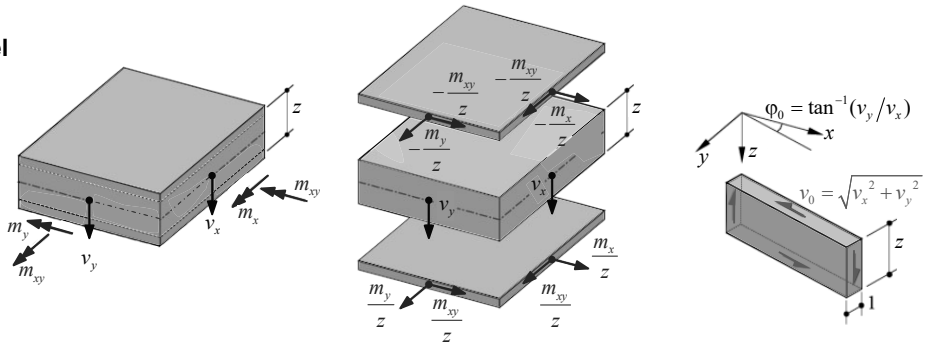

→ Reinforcement of the sandwich covers = yield conditions for slabs according to static method:

$$a_{sx} f_{sd} \geq \frac{m_x}{z} + k \left| \frac{m_{xy}}{z} \right|$$

$$a_{sy} f_{sd} \geq \frac{m_y}{z} + \frac{1}{k} \left| \frac{m_{xy}}{z} \right|$$

$$a'_{sx} f_{sd} \geq -\frac{m_x}{z} + k' \left| -\frac{m_{xy}}{z} \right|$$

$$a'_{sy} f_{sd} \geq -\frac{m_y}{z} + \frac{1}{k'} \left| -\frac{m_{xy}}{z} \right|$$

i.e.

$$m_{xu} \geq m_x + k \left| m_{xy} \right| \qquad m_{yu} \geq m_y + k^{-1} \left| m_{xy} \right|$$

$$m'_{xu} \geq -m_x + k' \left| m_{xy} \right| \qquad m'_{yu} \geq -m_y + k'^{-1} \left| m_{xy} \right|$$

and by multiplication follows:

$$\left(\frac{m_{xy}}{z} \right)^2 - \left(\frac{m_{xu}}{z} - \frac{m_x}{z} \right) \left(\frac{m_{yu}}{z} - \frac{m_y}{z} \right) = 0$$

$$\left(\frac{m_{xy}}{z} \right)^2 - \left(\frac{m'_{xu}}{z} + \frac{m_x}{z} \right) \left(\frac{m'_{yu}}{z} + \frac{m_y}{z} \right) = 0$$

$$m_{xu} = z a_{sx} f_{sd} \qquad m_{yu} = z a_{sy} f_{sd}$$

$$m'_{xu} = z a'_{sx} f_{sd} \qquad m'_{yu} = z a'_{sy} f_{sd}$$

Condition for «Regime 1» (not from normal moment yield criterion):

$$f_{cd} z t_{inf} \geq m_{xu} - m_x + m_{yu} - m_y$$

$$f_{cd} z t_{sup} \geq m'_{xu} + m_x + m'_{yu} + m_y$$

The sandwich model is based on the static method of the theory of plasticity and thus provides a lower limit value of the resistance. The design criteria for the membrane elements of the sandwich covers, combined with the lever arm ***z***, result in the yield conditions for slabs as shown in the figure.

It can be seen that these correspond to the normal moment yield criterion (as long as no failure due to concrete cracking occurs).

Slabs - Yield conditions

Pure twisting - Investigation with sandwich model (lower limit value)

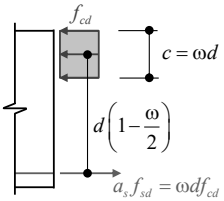

Isotropic reinforcement: $m_{x,u} = m_{y,u} = m_u = m'_{x,u} = m'_{y,u}$

$$m_u = a_s f_{sd}\left(d - \frac{a_s f_{sd}}{2 f_{cd}}\right) = d^2 f_{cd}\omega\left(1-\frac{\omega}{2}\right)$$

- Normal moment yield condition: $m_{xy} = m_u$

$$m_{xy}^2 - (m_{x,u} - m_x)(m_{y,u} - m_y) = 0 \quad \text{with } m_x, m_y = 0$$
$$\rightarrow m_{xy} = \sqrt{m_{x,u} m_{y,u}} = m_u \qquad \text{analogous for } m'$$

The load bearing behaviour under pure twisting can also be investigated with the sandwich model. It is an application of the static method of the theory of plasticity and therefore provides a lower limit value of the resistance. In an isotropically reinforced slab, the positive and negative bending resistances in both directions are identical (neglecting the difference in static depth due to the reinforcement layers).

It follows from the normal moment yield condition that the maximum resisting twisting moment corresponds exactly to the bending resistance m_u.

Slabs - Yield conditions

Pure twisting - Investigation with sandwich model (lower limit value)

- Lower limit value

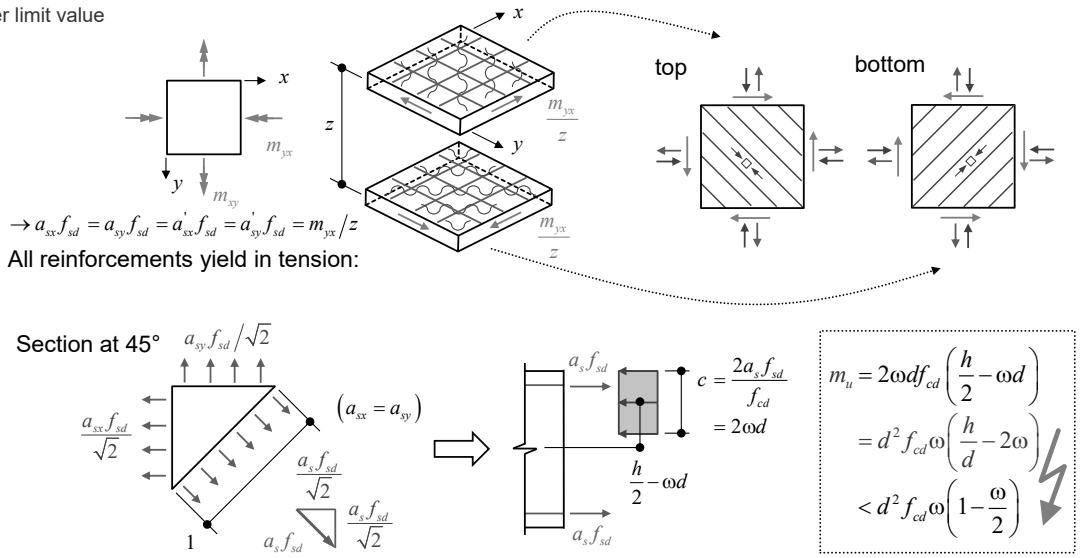

With the help of the sandwich model, the twisting moments on a slab element can be divided into equivalent force couples acting on the covers of the sandwich. Thus, the covers experience a pure shear load in their plane. In each cover there is a compression field in the concrete which is inclined by +45° and -45°, respectively, to the reinforcement directions. Together with equally high tensile forces in both reinforcements, it is in equilibrium with the applied shear load. If the tensile forces in the reinforcements are taken into account in the calculation of the bending resistance, a higher concrete compression zone is required (to compensate for the tensile force of the reinforcement in the compression zone), resulting in a smaller lever arm of the internal forces, which reduces the bending resistance.

Note that tensile forces in the reinforcement in the compression zone are kinematically admissible: The reinforcement strains, in the directions *x* and *y*, can both be positive while the principal compressive strain (under 45° in this case) is negative. For further details, see membrane elements (load-deformation behaviour, Mohr's circles for strains).

Slabs - Yield conditions

Pure twisting - Investigation with sandwich model (lower limit value)

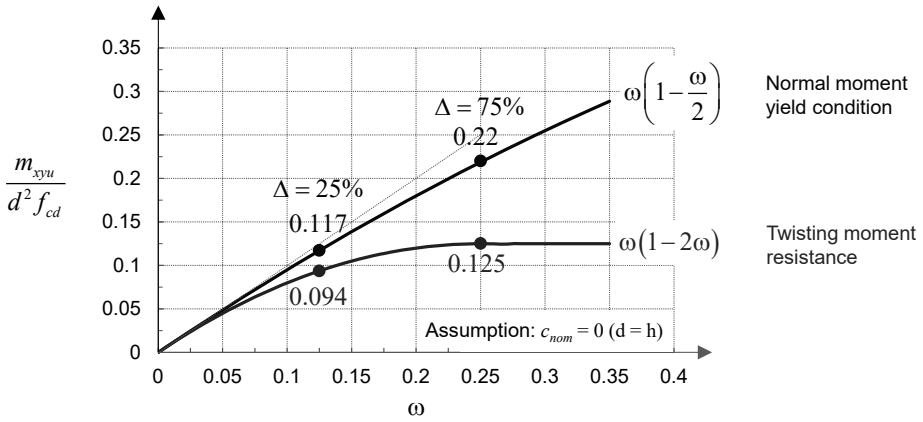

Corner supports with large twisting moments → Caution!

This reduction of the bending resistance at high reinforcement ratios leads to large differences in the maximum resisting twisting moments in comparison with the normal moment yield criterion. The normal moment yield condition overestimates the resistance in these areas (see slide 21). Special care must therefore be taken for corner supports (large twisting moments!).

Slabs - Yield conditions

Yield conditions for skew reinforcement

Superposition of the bending resistances of k reinforcement layers in the reinforcement directions ψ_k

(Transformation of all $\{m_k = m_{ku},\ m_t = 0\}$ in the directions x,y):

$$\mu_x = \sum_{k=1}^{r} m_{ku} \cos^2 \psi_k \qquad \mu'_x = \sum_{k=1}^{r} m'_{ku} \cos^2 \psi_k$$

$$\mu_y = \sum_{k=1}^{r} m_{ku} \sin^2 \psi_k \qquad \mu'_y = \sum_{k=1}^{r} m'_{ku} \sin^2 \psi_k$$

$$\mu_{xy} = \sum_{k=1}^{r} m_{ku} \sin \psi_k \cos \psi_k \qquad \mu'_{xy} = \sum_{k=1}^{r} m'_{ku} \sin \psi_k \cos \psi_k$$

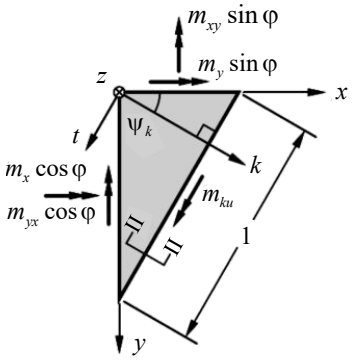

Normal moment yield condition for skew reinforcement:

$$m_{au}(\varphi) \approx \sum_{k=1}^{r} m_{ku} \cos^2(\varphi - \psi_k) = \mu_x \cos^2 \varphi + \mu_y \sin^2 \varphi + 2\mu_{xy} \sin \varphi \cos \varphi$$

$$m'_{au}(\varphi) \approx \sum_{k=1}^{r} m'_{ku} \cos^2(\varphi - \psi_k) = \mu'_x \cos^2 \varphi + \mu'_y \sin^2 \varphi + 2\mu'_{xy} \sin \varphi \cos \varphi$$

('≈' since different compression zone heights → no compatible mechanism. But compression fields in the concrete are not orthogonal → f_{cd} exceeded, thus no clear lower/upper limit value. For not too high reinforcement ratios however very good approximation)

Check condition $m'_{au}(\varphi) \le m_a(\varphi) \le m_{au}(\varphi)$ in all directions φ (see next slide)

To determine the yield condition $Y(m_x, m_y, m_{xy}) = 0$, the bending resistances of the positive or negative yield lines (normal moment resistances) of k reinforcement layers in the reinforcement directions ψ_k are superimposed. Due to the skew directions of the reinforcement layers, a resistance m_{xyu} results, in contrast to orthogonal reinforcement. This results in the normal moment yield condition for skew reinforcement.

As with orthogonal reinforcement, the concrete compression zone heights are generally different, $c_x \neq c_y$. This means no kinematically admissible displacement state can be assigned. It is, therefore, a lower limit value of the ultimate load.

On the other hand, the concrete compression zones of the different reinforcement directions do not run orthogonal to each other in the case of skew reinforcement and thus violate the yield condition. The resistance is thus overestimated. However, a good approximation is achieved for not too high reinforcement ratios.

Slabs - Yield conditions

Yield conditions for skew reinforcement

Check condition in all directions φ: $m'_{au}(\varphi) \le m_a(\varphi) \le m_{au}(\varphi)$

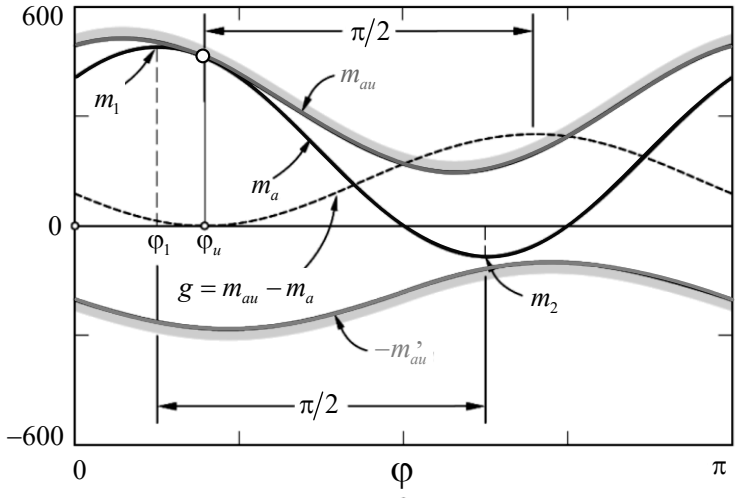

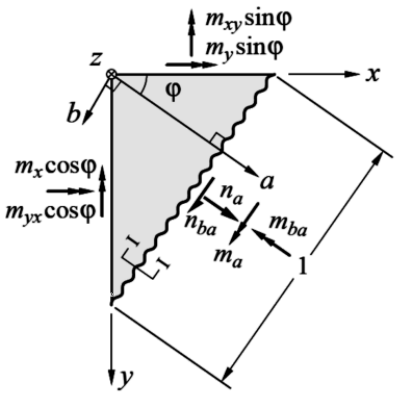

[Seelhofer (2009)]

Analogous to orthogonal reinforcement, the characteristic curves of the action m_a and the resistances m_{au} and m'_{au} can be expressed as a function of direction φ. The point of contact of the two curves corresponds to the controlling direction φ_u in which the yield condition is satisfied.

Additional remark

- The maximum and minimum normal moment resistances are in the principal directions of $m_{au}(\varphi)$ or $m'_{au}(\varphi)$ respectively (no longer in directions φ=0 and φ=π/2 as for ortogonal reinforement) .

Slabs - Yield conditions

Yield conditions for skew reinforcement

Superposition of the bending resistances of *k* reinforcement layers in the reinforcement directions ψ_k

(Transformation of all $\{m_k = m_{ku},\ m_t = 0\}$ in the directions x,y):

$$\mu_x = \sum_{k-1}^{r} m_{ku} \cos^2 \psi_k \qquad \mu'_x = \sum_{k-1}^{r} m'_{ku} \cos^2 \psi_k$$

$$\mu_y = \sum_{k-1}^{r} m_{ku} \sin^2 \psi_k \qquad \mu'_y = \sum_{k-1}^{r} m'_{ku} \sin^2 \psi_k$$

$$\mu_{xy} = \sum_{k-1}^{r} m_{ku} \sin \psi_k \cos \psi_k \qquad \mu'_{xy} = \sum_{k-1}^{r} m'_{ku} \sin \psi_k \cos \psi_k$$

Bending resistance in the direction φ:

$$m_{au}(\varphi) \approx \sum_{k=1}^{r} m_{ku} \cos^2(\varphi - \psi_k) = \mu_x \cos^2 \varphi + \mu_y \sin^2 \varphi + 2\mu_{xy} \sin \varphi \cos \varphi$$

$$m'_{au}(\varphi) \approx \sum_{k=1}^{r} m'_{ku} \cos^2(\varphi - \psi_k) = \mu'_x \cos^2 \varphi + \mu'_y \sin^2 \varphi + 2\mu'_{xy} \sin \varphi \cos \varphi$$

Check condition $m'_{au}(\varphi) \le m_a(\varphi) \le m_{au}(\varphi)$ in all directions φ

→ Normal moment yield criterion for skew reinforcement:

$$\boxed{\begin{aligned} Y &= (\mu_{xy} - m_{xy})^2 - (\mu_x - m_x)(\mu_y - m_y) = 0 \\ Y' &= (\mu'_{xy} + m_{xy})^2 - (\mu'_x + m_x)(\mu'_y + m_y) = 0 \end{aligned}}$$

≥ 0 ≥ 0 ≥ 0 ≥ 0

Slabs - Yield conditions

Example of skew reinforcement

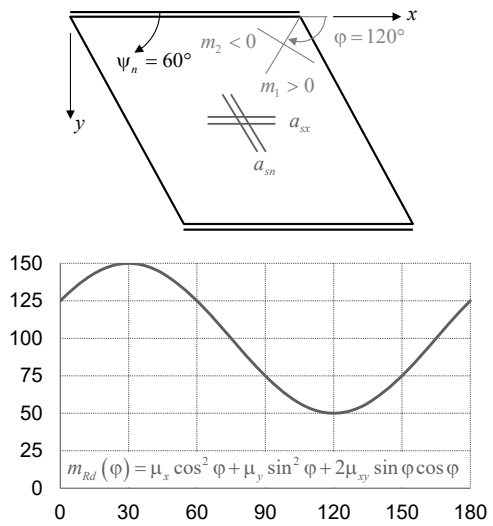

$m_{Rdx} = 100$ kNm/m
$m_{Rdn} = 100$ kNm/m
$\psi_n = 60°$

$\mu_x = m_{Rdx} \cdot \cos^2 0° + m_{Rdn} \cdot \cos^2 60° = 125$ kNm/m
$\mu_y = m_{Rdx} \cdot \sin^2 0° + m_{Rdn} \cdot \sin^2 60° = 75$ kNm/m
$\mu_{xy} = m_{Rdx} \cdot \sin 0° \cos 0° + m_{Rdn} \cdot \sin 60° \cos 60° = \sqrt{3} \cdot 25 = 43.3$ kNm/m

$\varphi = 120°: \; m_{Rdmin} = 50$ kNm/m
$\varphi = 30°: \; m_{Rdmax} = 150$ kNm/m

Maxima and minima of the bending resistances do not occur in the reinforcement directions.
Rather, a minimum occurs in the direction of the bisector of the obtuse angle. The resistance is significantly reduced even with slight skewness.

The example shows a two-sided supported slab with the shape of a parallelogram. The reinforcement is arranged at an angle of 60° (as appears natural for the given slab geometry in plan). The plastic moments of resistance are the same in *x*- and *n*-direction.

The bending resistances can be superimposed in the directions of the coordinate axes. The normal moment yield criterion shows that the maxima and minima of the resistance do not occur in the reinforcement directions but in the angle bisectors. The resistance is already significantly reduced with a slight skew between the two reinforcements for directions close to the bisector of the obtuse angle (and enlarged in the direction of the acute angle).

Slabs - Yield conditions

Yield conditions for skew reinforcement

Using oblique coordinates, design equations can be formulated (as with membrane elements):

$$m_\xi = m_x \sin\psi + m_y \cos\psi \cot\psi - 2m_{xy}\cos\psi \qquad m_\eta = m_y / \sin\psi \qquad m_{\xi\eta} = m_{\eta\xi} = m_{xy} - m_y \cot\psi$$

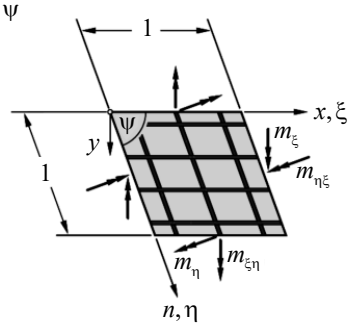

The normal moment yield criterion in oblique coordinates is:

(with conditions)

$$Y = m_{\xi\eta}^2 - \left(m_{xu}\sin\psi - m_\xi\right)\left(m_{nu}\sin\psi - m_\eta\right) = 0 \qquad Y' = m_{\xi\eta}^2 - \left(m'_{xu}\sin\psi + m_\xi\right)\left(m'_{nu}\sin\psi + m_\eta\right) = 0$$

$$-m'_{xu}\sin\psi \le m_\xi \le m_{xu}\sin\psi \qquad -m'_{nu}\sin\psi \le m_\eta \le m_{nu}\sin\psi$$

Notation in parametric form
→ direct dimensioning possible:

(Parameters k and k' freely selectable, minimum reinforcement results for $k = k' = 1$)

$$m_{xu} \ge \frac{1}{\sin\psi}\left(m_\xi + k\left|m_{\xi\eta}\right|\right) \qquad m_{nu} \ge \frac{1}{\sin\psi}\left(m_\eta + k^{-1}\left|m_{\xi\eta}\right|\right) \qquad m'_{xu} \ge \frac{1}{\sin\psi}\left(-m_\xi + k'\left|m_{\xi\eta}\right|\right) \qquad m'_{nu} \ge \frac{1}{\sin\psi}\left(-m_\eta + \left(k'\right)^{-1}\left|m_{\xi\eta}\right|\right)$$

$$k = \left|\sin\psi\tan\varphi_u + \cos\psi\right| \qquad k' = \left|\sin\psi\tan\varphi'_u + \cos\psi\right|$$

[Seelhofer (2009)]

For the derivation of the design equations, it is helpful if the internal forces are defined in an oblique coordinate system and thus based on skew stress components. The corresponding bending and twisting moments can then be defined according to the figure. The definitions of the normal moment yield criterion and the equivalent representation in parametric form are analogous to orthogonal reinforcement.

5 Slabs

In-depth study and additions to Stahlbeton II (Chapter 7.2)

5.3 Equilibrium solutions

Slabs - Equilibrium solutions

Structural analysis / Calculation methods - Overview

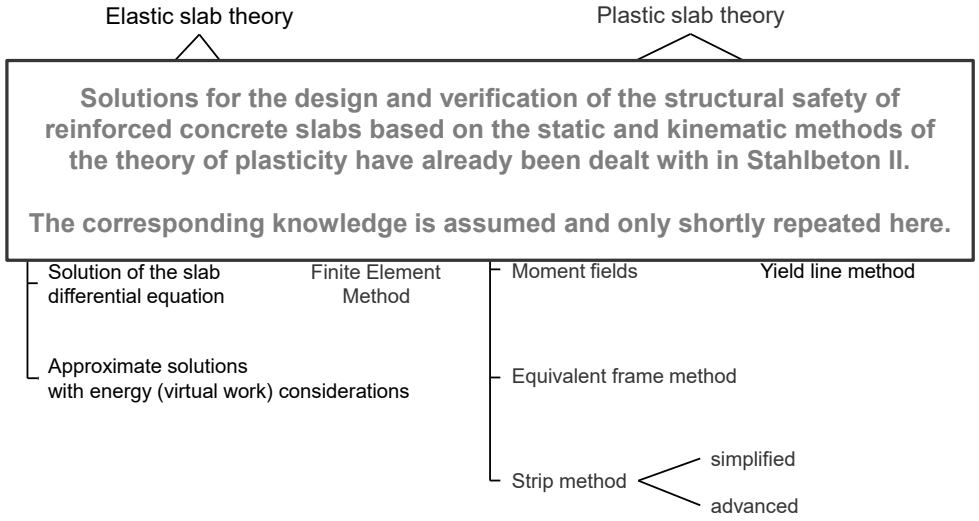

Slabs - Equilibrium solutions

Overview

Equilibrium solutions are based on the lower or static limit theorem of the theory of plasticity.

Requirements: → statically admissible stress state (equilibrium and static boundary conditions satisfied)
→ yield conditions not violated anywhere

Determination of statically admissible stress states:

- Elastic slab theory: In addition to equilibrium and static boundary conditions, the elastic compatibility conditions are also satisfied here. The finite element method can be used to treat cases with any geometry and load (the most common method today). In addition, there are various textbooks with corresponding tables.
- Moment fields: Combination of different moment fields for selected geometries and loads
- Strip method: This method, which goes back to Hillerborg, assumes strip-shaped bending elements in two usually orthogonal directions (simple strip method). With the advanced strip method, concentrated forces can be treated with the aid of corresponding moment fields or load distribution elements.
- Equivalent frame method: Global equilibrium solutions for flat and mushroom slabs (distribution of moments in transverse direction based on elastic solutions).

A lower limit value for the load capacity of a slab results according to the static limit value theorem of the theory of plasticity, if statically admissible stress states are considered which satisfy the equilibrium conditions and the static boundary conditions, and do not infringe the yield conditions anywhere. If a slab is designed on this basis, its load capacity is in no case less than the load associated with the equilibrium solution under consideration, provided that its deformation capacity is sufficient. The flow of forces can be tracked down to the last detail, which enables the development of the corresponding detailing.

Today, the design of reinforced concrete slabs is largely based on calculations using the finite element method, which is based on Kirchhoff's theory of thin elastic slabs with small deflections. However, cracks often occur even under dead load, especially near supports or concentrated loads, which is associated with a redistribution of the internal forces. Further rearrangements result from restraint forces, which are always present but practically cannot be calculated. Thus, the internal forces already deviate from the values calculated for a homogeneous elastic, initially stress-free behaviour in the serviceability limit state. It is therefore incorrect to justify the use of internal forces calculated according to Kirchhoff's theory of thin elastic slabs by stating that the «real» stress state is recorded with sufficient accuracy. Rather, it is a special procedure according to the static method of the theory of plasticity, since the elastic solution merely provides one of the infinite number of possible equilibrium states in the slab.

Slabs - Equilibrium solutions

Overview

Equilibrium solutions are particularly suitable for the design of slabs. If a slab is dimensioned according to these methods and if its deformation capacity is sufficient, its load-carrying capacity will in no case be less than the corresponding load.

The static method of the theory of plasticity ensures sufficient bending resistance. However, the influence of shear forces is not taken into account and must be investigated separately.

If a compatible failure mechanism is found for an equilibrium solution (see chapter yield line method), it corresponds to a complete solution according to the theory of plasticity. This results in the (theoretically) exact ultimate load.

If the design is strictly based on the moments determined according to the elastic slab theory, unpracticle solutions are often obtained. In practice, the moments are therefore often averaged in the transverse direction over a certain width, especially in the area of moment peaks near concentrated loads (point supports). This procedure is questionable as the influence on the twisting moments and on the moments perpendicular to the considered direction is neglected and therefore does generally not result in a state of equilibrium. Although this is usually harmless, it is generally unsatisfactory, and the question arises whether if constant moments over a certain width are assumed, this should not better be done already when calculating the internal forces.

The static method of the theory of plasticity meets this desire for greater freedom in practical dimensioning. In the following chapters, methods suitable for manual calculations are presented which make it possible to design a slab with equilibrium solutions.

The design of a slab according to the static method of the theory of plasticity ensures sufficient bending resistance. The influence of shear forces is not taken into account. This applies in particular to the FE programs mentioned. Since shear forces can lead to sudden failure and the brittle nature of the failure makes it impossible to rearrange the internal forces, they should not be ignored in the design. For the consideration of their influence please refer to lecture *4.2 Slabs part 2*

Slabs - Equilibrium solutions

Simple strip method: Basics

→ Neglect the twisting moments, satisfy equilibrium conditions only with m_x and m_y
→ Divide the load q into the parts q_x and q_y (q_{xy} = 0)

$$\frac{\partial^2 m_x}{\partial x^2} + 2\frac{\partial^2 m_{xy}}{\partial x \partial y} + \frac{\partial^2 m_y}{\partial y^2} + q = 0 \qquad \rightarrow q = q_x + q_y\,, \qquad \underbrace{\frac{\partial^2 m_x}{\partial x^2} = -q_x}_{\text{beam in x-direction}}\,, \qquad \underbrace{\frac{\partial^2 m_y}{\partial y^2} = -q_y}_{\text{beam in y-direction}}$$

→ Total load q is thus carried by the beam load-bearing effect in x- and y-direction
→ Distribution of the load can be freely chosen.
→ In order to ensure sufficient deformation capacity and satisfactory behaviour in serviceability limit state, q_x and q_y should be chosen cautiously.
→ This also applies to the calculation of the individual (often hyperstatic) strips according to beam theory.

The idea of considering a slab as a group of beams orthogonal to each other was developed very early on. Marcus (1931) suggested that the distribution of the load should be such that the elastic deflections of the fictitious beams in the middle of the slab coincide (→ hint for selection of distributed load: per direction ~ L^{-4}).

Hillerborg showed that the strip method is an application of the lower limit theorem of the theory of plasticity and generalised the method.

The basic idea of the simple strip method is to neglect twisting moments and to satisfy the equilibrium conditions with bending moments m_x and m_y alone. By dividing the load q into two parts q_x and q_y, the equilibrium condition with m_{xy} = 0 results in the formulae according to the slide. Thus, in contrast to the generally valid relation, q_{xy} is set equal to zero. The total load q is transferred by the beam load-bearing effect in the directions x and y.

The idea of investigating the load-bearing behaviour of slabs by means of mutually orthogonal groups of beams was used at a very early stage. Hillerborg showed that the treatment of slabs as mutually orthogonal groups of beams represents an application of the lower limit theorem of the theory of plasticity. He also showed that the distribution of the load into the two proportions q_x and q_y is free and at each point of the slab may be chosen differently. In order to ensure sufficient deformation capacity and satisfactory behaviour in the serviceability limit state, q_x and q_y should be selected cautiously. The same applies when selecting any redundant variables when calculating hyperstatic individual strips according to the beam theory.

Slabs - Additions

Advanced strip method: Load distribution elements

Load distribution elements are used to treat supports and concentrated loads with the strip method. These convert a point load into a uniformly distributed load or vice versa. They thus correspond to the solutions for point-supported slabs (in the middle) under uniform loads.

Supports: The load distribution elements are regarded as area bearings with uniform compression, which are loaded by indirectly supported strips or (usually) hidden beams. The bending resistances resulting from the beams are increased in order to account for the bending resistances required for load transfer in the column area (= load distribution element).

Individual loads: The individual loads are applied to the slab as uniformly distributed surface loads, which are transferred to the supports by strips or (usually) hidden beams. The resulting bending resistances of the strips are superimposed with the bending resistances required to convert the point load into an evenly distributed area load (= load distribution element).

The strip method is suitable primarily for the treatment of line or surface-supported slabs with distributed loads. The advanced strip method also allows concentrated loads and point supports to be taken into account. This is illustrated on the following slides for point supports. Concentrated loads can be treated analogously.

The use of the advanced strip method can be similar to the handling of hidden beams. The first step is to think of the point supports as surface bearings with finite dimensions and uniformly distributed reactions and calculate the corresponding strip moments m_x and m_y. Hidden beams can also be taken into account for this purpose. In the second step, the required bending resistances m_{xu} and m_{yu} of the load distribution elements are superimposed on these moments. Thereby the uniformly distributed reactions of the surface bearings, applied with reverse sign, can be carried to the point-shaped supports, without violating the yield conditions.

Slabs - Additions

Advanced strip method: Load distribution elements - Repetition moment fields

The moment fields below are suitable as "load distribution elements" for converting point loads into area loads.

If constant positive moments m_x und m_y are superimposed on them, the lower bound value for the load-carrying capacity of an infinitely extended flat slab under uniformly distributed load is determined with $m_{xu} = m_{yu} = m_u$ and $m'_{xu} = m'_{yu} = \lambda m_u$ (Marti 1981):

$$q \geq 4(1+\lambda)\frac{m_u}{l^2},\ \lambda = \frac{m'_{xu}}{m_u} = \frac{m'_{yu}}{m_u}$$

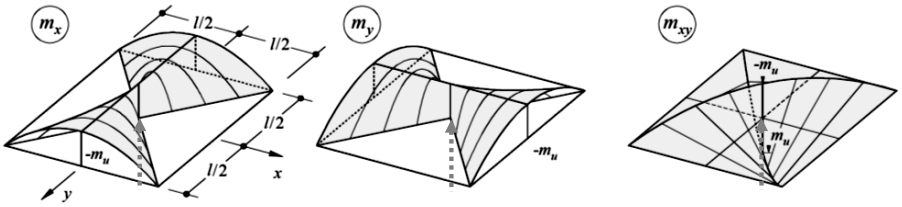

$$m_x = 0 \qquad m_y = m_u\left(\frac{y^2}{x^2} - 1\right) \qquad m_{xy} = m_u\left(\frac{y}{x} - \frac{4xy}{l^2}\right) \quad \text{for } \left(x^2 > y^2\right)$$

$$m_x = m_u\left(\frac{x^2}{y^2} - 1\right) \qquad m_y = 0 \qquad m_{xy} = m_u\left(\frac{x}{y} - \frac{4xy}{l^2}\right) \quad \text{for } \left(x^2 < y^2\right)$$

In the second step, an equilibrium solution is required for a rectangular slab with free edges supported in the middle and loaded by a uniformly distributed surface load. For this purpose, the discontinuous moment fields illustrated in the figure (or the resulting equations) can be used for a square slab. The yield condition for positive moments is not violated anywhere with $m_{xu} = m_{yu} = m_u$ only being satisfied at the centre of the slab. The yield condition for negative moments is also not violated anywhere, $m'_{xu} = m'_{yu} = m_u$ is only satisfied along the coordinate axes $x = 0$ and $y = 0$. If constant positive moments m_x and m_y are superimposed on these moment fields, $m_{xu} = m_{yu} = m_u$ and $m'_{xu} = m'_{yu} = \lambda m_u$ give a lower limit value q for the load capacity of an infinitely extended flat slab under a uniformly distributed load.

Slabs - Additions

Advanced strip method: Load distribution elements

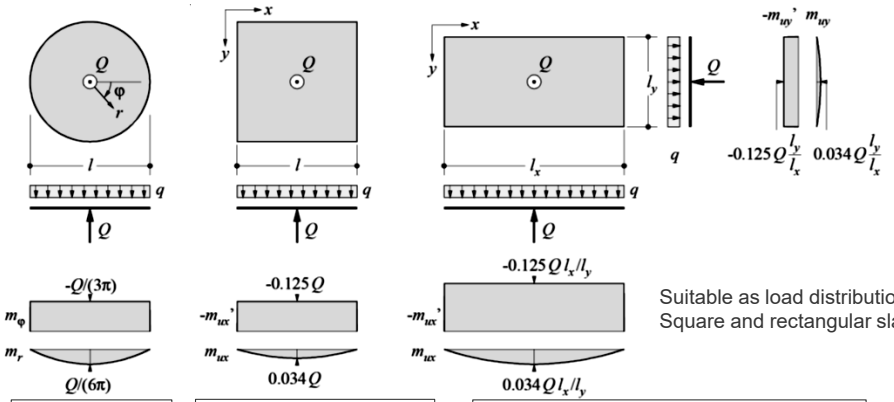

Suitable as load distribution elements:
Square and rectangular slabs

$$\left(m_u + m'_u\right) \geq \frac{Q}{2\pi}$$

(complete solution)

$$m'_u \geq \frac{Q}{8}$$

$$m_u \geq \left(\frac{1}{2\pi} - \frac{1}{8}\right) Q = 0.034 \cdot Q$$

$$m'_{x,u} \geq \frac{Q}{8}\frac{l_x}{l_y} \qquad m_{x,u} \geq 0.034 \cdot q l_x^{\,2} = 0.034 \cdot Q \frac{l_x}{l_y}$$

$$m'_{y,u} \geq \frac{Q}{8}\frac{l_y}{l_x} \qquad m_{y,u} \geq 0.034 \cdot q l_y^{\,2} = 0.034 \cdot Q \frac{l_y}{l_x}$$

(Solutions correspond to upper limit values, but column dimensions are finite and lower limit value $q \geq 4\left(1+\lambda\right) m_u / l^2$ from moment fields is strongly on the safe side → for design ok)

The figure shows further examples of point-supported load distribution elements with the associated conditions of the bending resistances.

For the circular slab, the same result can be derived with the upper limit theorem of the theory of plasticity, which corresponds to the complete solution.

For the square slab with free edges, a solution according to Nielsen (1984) is also possible based on the circular slab. The negative resistance $m'_u = Q/8$, which corresponds to the mean value of the negative bending moments in the support axes, must be maintained over the entire slab, while the positive resistance may be graded parabolically as with the circular slab. For a slab of any geometry under point load Q, this solution actually corresponds to an upper limit value. Since in reality there are always finite column dimensions and the lower limit value is strongly on the safe side, the relationships can still be used for the design.

If the area on which the uniformly distributed surface load acts is not square but rectangular, the transformation theorem is used to obtain the formulations given above.

Additional remark

- By means of the transformation theorem, a solution valid in the coordinates x and y for an isotropically reinforced slab under distributed load q and point load Q with the bending resistances m_u (positive moments) and m'_u (negative moments) can be transferred to an orthotropically reinforced slab with $m_{yu} = \mu \cdot m_{xu} = \mu \cdot m_u$ and $m'_{yu} = \mu \cdot m'_{xu} = \mu \cdot m'_u$. The coordinates are to be transformed according to the relations $x^* = x$ and $y^* = y\sqrt{\mathrm{m}}$, a concentrated load according to $Q^* = Q \cdot \sqrt{\mu}$, and distributed loads $q^* = q$ (see slide 56).

Slabs - Additions

Advanced strip method: Example rectangular slab, simply supported on one side, supported on 2 supports

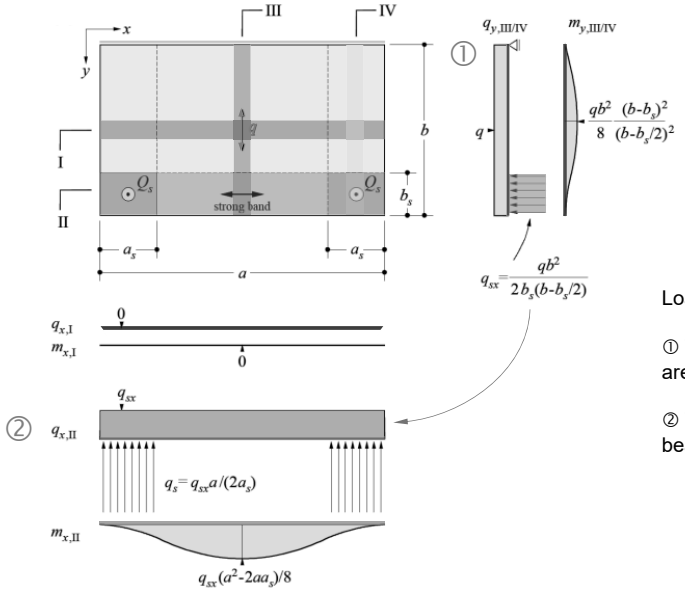

Load transfer:

① Total load first carried in *y*-direction (hidden beam as area bearing $a \cdot b_s$)

② Transfer of the reactions on $a \cdot b_s$ by the hidden beam in *x*-direction to the surface bearings $a_s \cdot b_s$

The example illustrates the application of the load distribution elements on a rectangular slab under a uniformly distributed area load. It is simply supported on one side and supported on two supports on the other side.

The entire load is first carried in the *y*-direction, whereby the hidden beam of width b_s along the free edge is regarded as an area bearing with uniformly distributed bearing compression. The corresponding reactions are then carried by the hidden beam in the *x*-direction, and the supports are now regarded as surface bearings with bearing compressions evenly distributed over the $a_s \cdot b_s$ area. In the last step, the calculated moments are superimposed with the required bending resistances Δm_u for the load transfer in the support area $a_s \cdot b_s$. (i.e. for the absorption of the uniformly distributed support compressions applied with reversed signs as load by the concentrated reaction).

Slabs - Additions

Advanced strip method: Example rectangular slab, simply supported on one side, supported on 2 supports

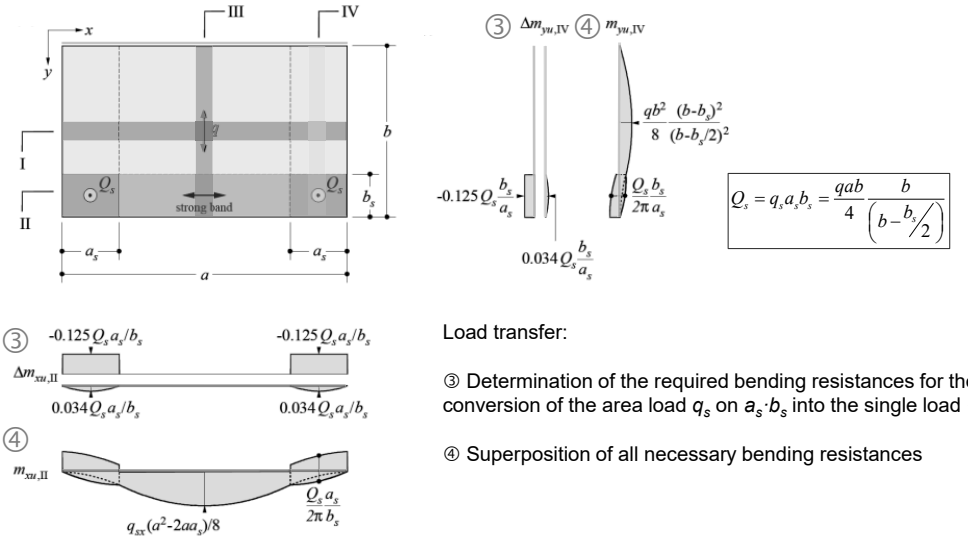

Load transfer:

③ Determination of the required bending resistances for the conversion of the area load q_s on $a_s \cdot b_s$ into the single load Q_s

④ Superposition of all necessary bending resistances

According to the superposition of the moment resistances, both upper and lower reinforcement in both reinforcement directions is required in the area of point loads and point supports. This is due to the fact that the point loads are carried by twisting moments with respect to the reinforcement directions, which require both upper and lower reinforcement according to the yield conditions.

By using static discontinuities, it would be possible to carry point loads even without twisting moments with respect to the reinforcement directions. However, this is not further explained here.

5 Slabs

In-depth study and additions to Stahlbeton II (Chapter 7.3)

5.4 Failure mechanisms

Slabs – Failure mechanisms

Structural analysis / Calculation methods - Overview

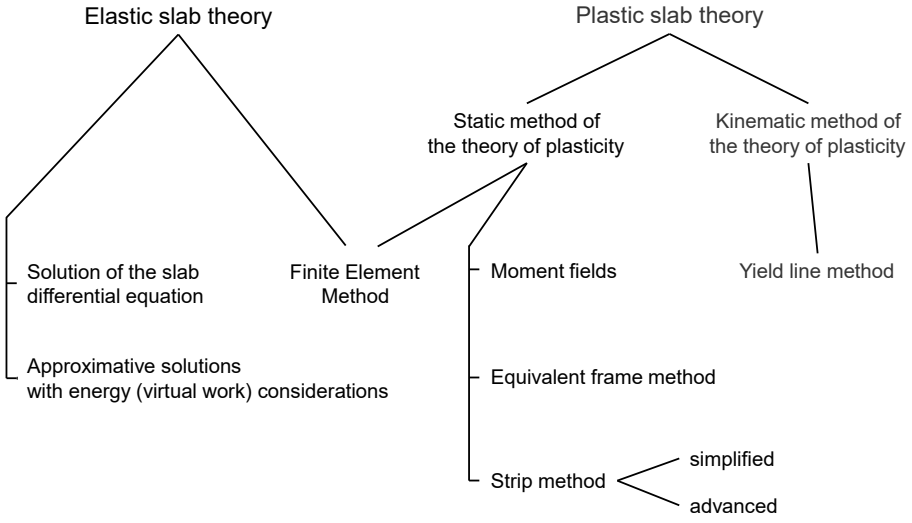

Slabs – Failure mechanisms

Yield line method

- The yield line method (Johansen, 1962) is an application of the kinematic method of the theory of plasticity.
- *Procedure*: Assume a kinematically admissible mechanism, then equate the external work done by the applied loads with the internal work (dissipation in rotating yield lines).
  → upper limit value for ultimate load.
- Usually different failure mechanisms have to be investigated, whereby for each mechanism the ultimate load has to be minimised with regard to possible free parameters.
- Rigid parts of the mechanisms usually have a high degree of internal static indeterminacy in contrast to beam structures. A strict plasticity verification (check that the yield conditions are not violated inside the rigid parts) is therefore hardly possible, except in simple special cases.

The yield line method dating back to Johansen (1962) is an application of the kinematic method of the theory of plasticity. By equating the external work done by the applied loads with the internal work done by rotating the yield lines for a kinematically admissible failure mechanism, an upper limit value for the load is obtained. Usually it is necessary to investigate different failure mechanisms and for each mechanism the ultimate load has to be minimised with regard to possible free parameters. Since the rigid parts of the mechanisms are usually highly statically indeterminate, it is rarely possible to carry out a strict plasticity verification, except in simple special cases, in contrast to beam structures.

Slabs – Failure mechanisms

Yield line method

- In comparison to solutions based on the elastic slab theory or equilibrium solutions, the yield line method is quite easy to apply, especially for the verification of existing structures → The kinematic method of the theory of plasticity has become much more widespread for slabs than for beams and membrane elements (very widespread especially in Scandinavia, also for design).

- The "equilibrium method" (Ingerslev, 1923) can be used to circumvent the analytical minimisation process, which is often complex, when using the yield line method. Here, equilibrium is formulated at the individual, rigid slab parts of a mechanism, whereby so-called "nodal forces" are to be considered. However, the method is only valid to a limited extent (partly disproven recently), and the minimisation process can be carried out without any problems using numerical methods today. It is therefore not dealt with in this course.

In comparison with solutions based on the elastic slab theory or equilibrium solutions, the yield line method is quite easy to apply. For this reason, the kinematic method of the theory of plasticity has become much more widespread for slabs than for beams and membrane elements. This is probably also due to the fact that solutions according to the yield line method were initially often regarded as lower limit values for the ultimate load (ignoring the upper and lower bound theorems of the theory of plasticity and in view of the fact that the ultimate load in experiments is often considerably higher than the calculated values).

The analytically complex minimisation process of the yield line method can be circumvented through the "equilibrium method" (Ingerslev, 1923), which was used some years before the widespread use of the yield line method already. Here equilibrium is formulated at the individual, rigid slab parts of a mechanism, whereby certain so-called «nodal forces» are to be considered. Since this method is only valid to a limited extent (partly disproven, though widely unknown) and the minimisation process can be carried out today without any problems by numerical methods, this method is not discussed here.

Slabs – Failure mechanisms

Yield line method – Dissipation (internal work) in a yield line

- Slab, orthogonally reinforced (*x*, *y*)
- Yield line in any direction *t*:
  Neglecting membrane forces (n_n = 0), it applies: $dD = m_n \dot{\omega}_n dt$
- Using the relationship: $m_{nu} = m_{xu} \cos^2 \varphi + m_{yu} \sin^2 \varphi$
- Results in the dissipation: $dD = \left(m_{xu} \cos^2 \varphi + m_{yu} \sin^2 \varphi \right) \dot{\omega}_n dt$
- With rotational velocities around the y- or x-axis: $\dot{\omega}_x = \dot{\omega}_n \cos\varphi, \quad \dot{\omega}_y = \dot{\omega}_n \sin\varphi$

  $d_y = dt \cos\varphi, \quad d_x = dt \sin\varphi$

→ Dissipation:

$$\boxed{dD = m_{xu} \dot{\omega}_x dy + m_{yu} \dot{\omega}_y dx}$$

= Sum of the products in the two reinforcement directions of:

bending resistance | rotational velocities around the corresponding axis | length of the yield line projected onto this axis

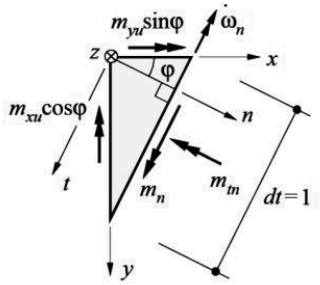

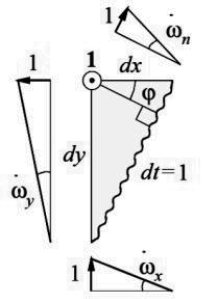

For the dissipation per unit length of a yield line in a slab element stressed by bending and twisting moments as well as membrane and shear forces, $dD = m_n \cdot \dot{\omega}_n + n_n \cdot \dot{\delta}_n$ is obtained. $\dot{\omega}_n$ and $\dot{\delta}_n$ describe the joint rotation and the joint opening in the middle plane of the slab. For vanishing membrane forces, $n_n = 0$, the dissipation work per element length *dt* of a yield line in *t*-direction is $dD = m_n \cdot \dot{\omega} \cdot dt$.

The bending resistance of an orthotropically reinforced slab in any direction rotated at angle φ to the *x*-axis is described by the relationship shown on slide 16. Through substitution, the dissipation as a function of the bending resistances in the *x*- and *y*-direction is obtained. The rotational velocity $\dot{\omega}_n$ can also be transformed into its components according to the coordinate axes in the figure.

According to the resulting relationship, the dissipation corresponds to the sum of the products of the bending resistance, the rotational velocity around the corresponding axis and the length of the yield line projected onto this axis in the two reinforcement directions. This is very helpful in practice, as it is much simpler than calculating the relative rotations of neigbouring slab parts and the normal moment resistance in the corresponding direction, particularly when varying yield line directions to minimise the ultimate load.

Slabs – Failure mechanisms

Example, units [m, kNm/m]

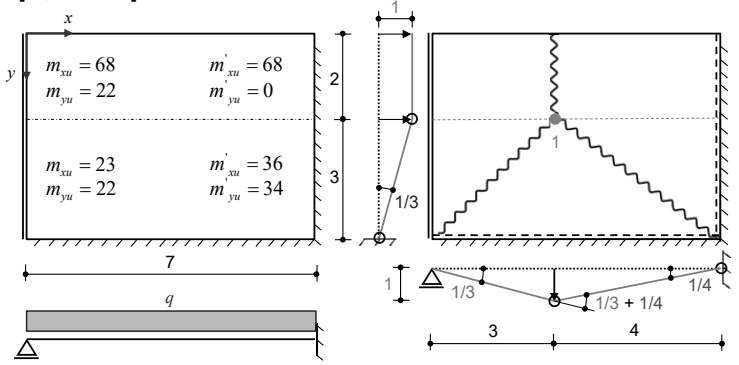

Signatures for yield lines
(n = direction of the normal of the border)

positive yield line,
$m_n = m_{nu}$

negative yield line,
$m_n = -m_{nu}' = \lambda m_{nu}$

$\lambda = m_u'/m_u$

Work of external forces $W =$ (pyramid + prism) - q $= 1 \cdot \left(3 \cdot 7 \cdot \frac{1}{3} + 2 \cdot 7 \cdot \frac{1}{2}\right) q = 14q$

Dissipation work

$$D = \underbrace{68 \cdot \left(\frac{1}{3} + \frac{1}{4}\right) \cdot 2 + 68 \cdot \frac{1}{4} \cdot 2 + 23 \cdot \left(\frac{1}{3} + \frac{1}{4}\right) \cdot 3 + 36 \cdot \frac{1}{4} \cdot 3}_{\text{x - dir.}} + \underbrace{22 \cdot \frac{1}{3} \cdot 7 + 34 \cdot \frac{1}{3} \cdot 7}_{\text{y - dir.}} = 311.25$$

$$W = D \rightarrow q_u \leq 22.2 kN/m^2$$

The example shows a rectangular slab, which is clamped on two sides, simply supported on one side and free on the fourth side. The reinforcement is graded so that two areas with different reinforcement resistances are created. The chosen mechanism consists of a pyramid and a prism, the proportions of which are chosen according to the dividing line of the resistances.

The position of the pyramid tip could also be optimised to minimise the dissipation = internal work (the external work is independent of the horizontal position of the tip since the volume of the failure figure remains the same). Equating the internal and external work results in the load capacity q.

Slabs – Failure mechanisms

Example: Optimisation of yield line geometry

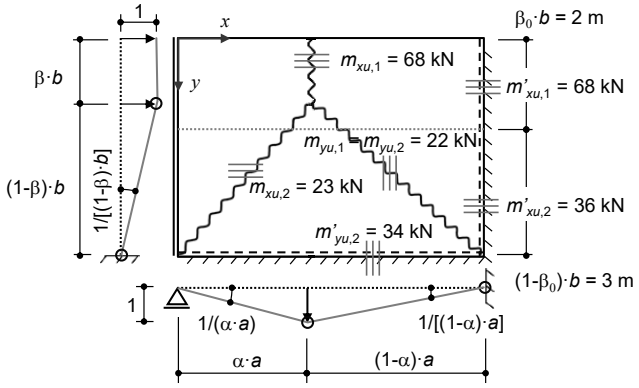

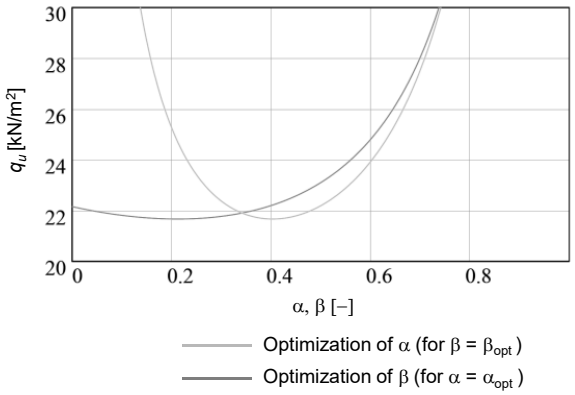

$$D = m_{xu,1}\left(\frac{1}{\alpha a}+\frac{1}{(1-\alpha)\alpha}\right)\beta_0 b + m'_{xu,1}\frac{1}{(1-\alpha)a}\beta_0 b + m_{xu,2}\left(\frac{1}{\alpha a}+\frac{1}{(1-\alpha)a}\right)(1-\beta_0)b + m'_{xu,2}\frac{1}{(1-\alpha)a}(1-\beta_0)b + m_{yu,2}\frac{1}{(1-\beta)b}a + m'_{yu,2}\frac{1}{(1-\beta)}a$$

$$W = \left[(1-\beta)\cdot b\cdot a\cdot\frac{1}{3}+\beta\cdot b\cdot a\cdot\frac{1}{2}\right]\cdot q = a\cdot b\cdot\frac{\beta+2}{6}\cdot q \quad\rightarrow\quad \frac{\partial q_u}{\partial\alpha}=0 \text{ and } \frac{\partial q_u}{\partial\beta}=0 \rightarrow \quad q_{u,opt}\left(\alpha\cdot a = 2.823\text{ m};\beta\cdot b = 1.062\ m\right) = 21.7\text{ kPa}$$

Conclusion: Despite the strong differences in geometry, the ultimate load deviates only slightly (flat minima)!

The geometry of the yield line pattern is now optimised as a function of the position of the tip of the pyramid. Hence, the dissipation D, the external work W and the ultimate load q_u depend on the parameters α and β.

The optimal (=minimum) ultimate load can be obtained by partially differentiating q_u with respect to a and b and setting the results equal to zero; this yields two equations for the two unknown parameters defining the geometry. The optimum position of the pyramid tip is at x = 2.83 m (rather than 3 m) and y = 1.062 m (instead of 2 m), with an ultimate load of 21.7 kPa (rather than 22.2 kPa). Despite the relatively large differences in geometry, the ultimate load is only slightly smaller..

Additional remark

- The curtailment of the reinforcement (at *b*-*b*) is maintained for the optimisation; otherwise, b = 0 would be the optimum solution.

Slabs – Failure mechanisms

Yield line method - Fan mechanisms

- Slab, isotropically reinforced ($m_{xu} = m_{yu} = m_u$)
- Principal radius of curvature in cone element

  from $\rho = Rr$ $\quad \frac{r}{\rho} = \frac{1}{R}$

→ Principal curvature $\chi_1 = \rho^{-1} = (Rr)^{-1}$

→ Rotation $\dot{\omega}_\varphi = \chi_1 r d\varphi$

- Dissipation per area element in the fan:

$$dD = m_u \dot{\omega}_\varphi dr = m_u \frac{1}{\rho} r d\varphi dr$$

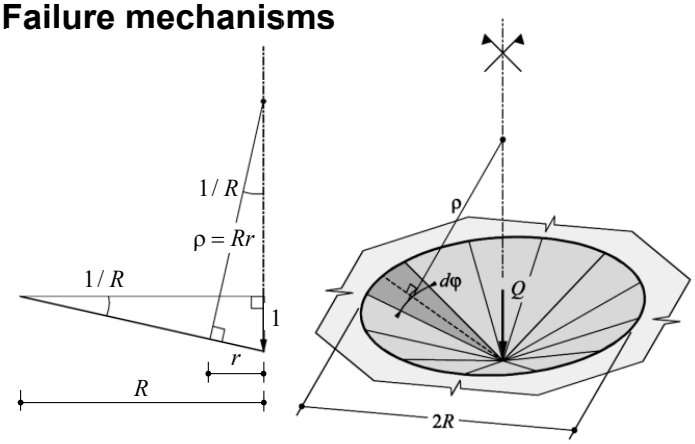

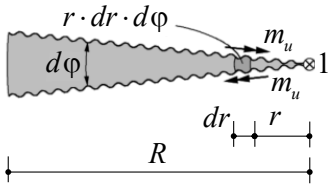

The figure illustrates the calculation of the dissipation for a fan mechanism in an isotropically reinforced slab, $m_{xu} = m_{yu} = m_u$.

The principal curvature follows from geometrical considerations on the failure shape (fan = cone or "funnel", simply curved = developable, radius of curvature *rR*), from which the rotation can be determined by means of integration via the angle φ. From this follows the differential dissipation work per area element in the fan.

Slabs – Failure mechanisms

Yield line method - Fan mechanisms

- Dissipation per area element in the fan:

$$dD = m_u \dot{\omega}_\varphi dr = m_u \frac{1}{\rho} r d\varphi dr$$

Dissipation inside a fan with opening angle β:

$$D = \left\{ \int_0^\beta \frac{1}{R(\varphi)} \int_0^{R(\varphi)} m_u(r,\varphi) dr \right\} d\varphi \qquad \text{with} \quad \rho = Rr$$

- where m_u and R can be general functions of angle φ
- Dissipation along the fan boundary (independent of R):

$$D = \int_0^\beta \frac{1}{R} m'_u \, R d\varphi = \int_0^\beta m'_u(r,\varphi) d\varphi$$

→ Dissipation in a fan with opening angle β for constant m_u and $m'_u = \lambda m_u$:

$$D = \beta(m_u + m'_u) = \beta m_u (1+\lambda)$$

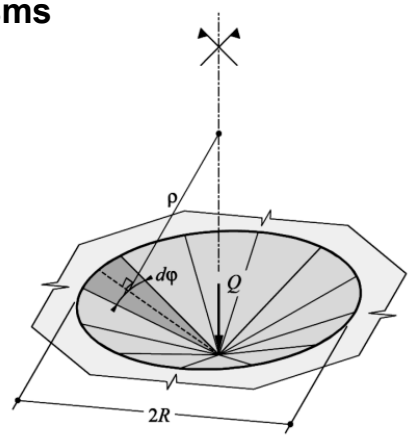

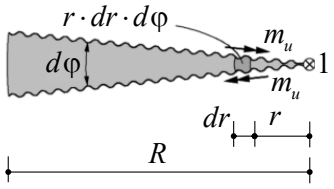

The dissipation inside a fan with opening angle β follows from the integral, where m_u and R can be general functions of the angle φ. The relationship for the dissipation along the fan boundary follows analogously from the failure shape and the resulting integral over the angle φ.

For constant m_u and $m'_u = \lambda \cdot m_u$ the dissipation work can be simplified according to the figure.

Slabs – Failure mechanisms

Concentrated load on slab of any geometry

$$\left.\begin{aligned} W &= Q \cdot 1 \\ D &= 2\pi m_u (1+\lambda) \end{aligned}\right\} \quad \boxed{Q_u \le 2\pi\left(m_u + m'_u\right) = 2\pi m_u \left(1+\lambda\right)}$$

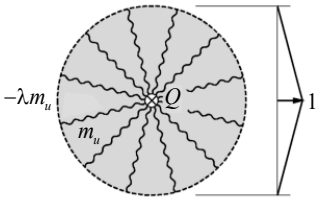

Same ultimate load as with moment field for a centrically supported circular slab under uniform load (independent of R) → complete solution for a circular slab. Upper limit value for other cases.

By applying the transformation theorem (*), the upper limit value is obtained for an orthotropically reinforced slab of any geometry:

$$\boxed{Q_u \le 2\pi\left(\sqrt{m_{xu} m_{yu}} + \sqrt{m'_{xu}\, m'_{yu}}\right) = 2\pi\sqrt{m_{xu} m_{yu}}\left(1+\lambda\right)}$$

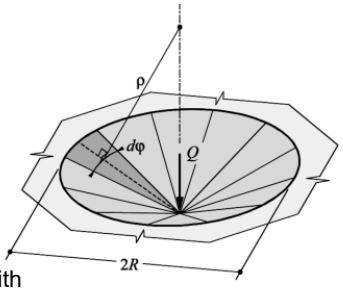

(*) A valid solution for a slab isotropically reinforced with bending resistances m_u, m'_u under loads q and Q in the coordinates (x,y), can be applied to an orthotropically reinforced slab with $m_{yu} = \mu \cdot m_{xu} = \mu \cdot m_u$, $m'_{yu} = \mu \cdot m'_{xu} = \mu \cdot m'_u$. The coordinates are to be transformed with $x^* = x$, $y^* = y\sqrt{\mu}$, the loads with $q^* = q$ and $Q^* = Q\sqrt{\mu}$
(The practical use is limited. For example, an isotropically reinforced square slab corresponds to an orthotropically reinforced slab with stronger reinforcement in the longer direction, which is unpractical).

5 Slabs

Appendix

Slabs - Yield conditions

Yield conditions for skew reinforcement

Representation of the yield condition:
(two elliptical cones; compare with orthogonal reinforcement where the peaks lie in the plane m_{xy} = 0 and the intersecting ellipse in a plane parallel to the m_{xy}-*axis*).

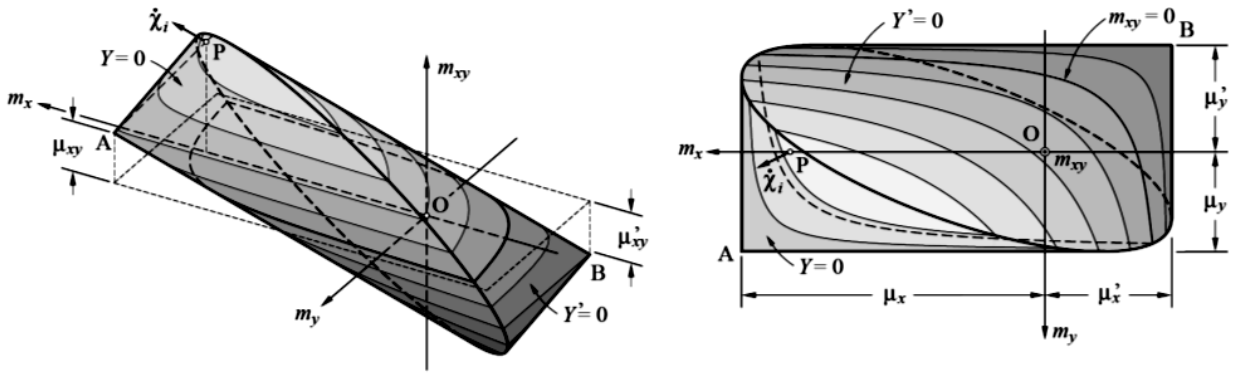

[Seelhofer (2009)]

As with orthogonal reinforcement the yield criterion can be represented by two elliptical cones. However, the skew reinforcement results in the tips of the cones no longer lying in the plane m_{xy} = 0. The points of the enveloping surface are compatible with the positive (Y = 0) and negative (Y' = 0) yield lines. On the intersection of the two surfaces, the stress points are compatible with the intersection of a positive and a negative yield line. The points A and B, on the other hand, denote the intersection of two positive and negative yield lines.

Slabs - Yield conditions

Skew reinforcement

Using the parametric form, the design (and the graphical representation) is possible analogous to orthogonal reinforcement.

$$m_{xu} \geq \frac{1}{\sin\psi}\left(m_\xi + k\left|m_{\xi\eta}\right|\right) \qquad m_{nu} \geq \frac{1}{\sin\psi}\left(m_\eta + k^{-1}\left|m_{\xi\eta}\right|\right) \qquad k = \left|\sin\psi\tan\varphi_u + \cos\psi\right|$$

$$m'_{xu} \geq \frac{1}{\sin\psi}\left(-m_\xi + k'\left|m_{\xi\eta}\right|\right) \qquad m'_{nu} \geq \frac{1}{\sin\psi}\left(-m_\eta + \left(k'\right)^{-1}\left|m_{\xi\eta}\right|\right) \qquad k' = \left|\sin\psi\tan\varphi'_u + \cos\psi\right|$$

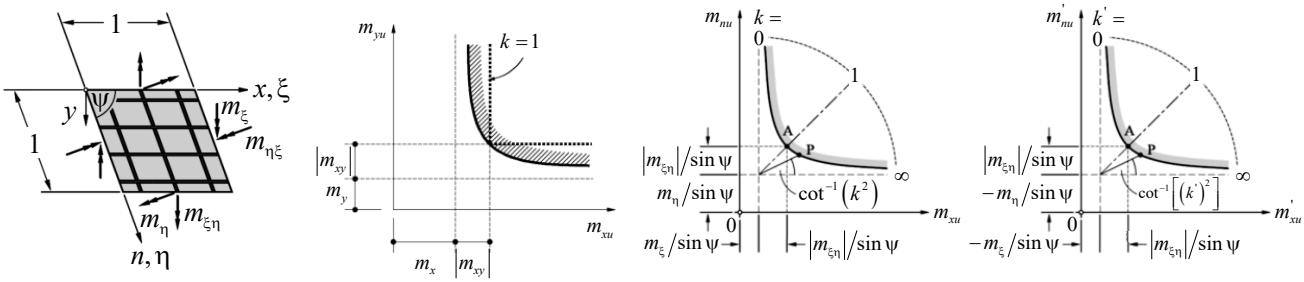

If no upper or lower reinforcement is required in one of the two reinforcement directions, refer to Seelhofer (2009).